Houlihan & Co. (Excavations) Limited
OHSEQ Management System

Project		**Trumps Green Road, Virginia Water.**	
Activity		The works are part of new development, which includes the construction of 67 new residential dwellings and the provision of one traveller pitch, including a road network and associated highway works, landscaping, a play area, drainage and utility infrastructure, and car and cycle parking. Construction of Emergeny access works as part of 278 works	
No:	Doc. Ref	***M0616 – MS - 2401- Groundworks 278 Works***	Client: Bellway ***Homes***

1.0	Project submission information	Document Prepared by:	Agron Selita	Signature:		Issue Date:	20/06/2026
		Document reviewed by:	Tom Keyes	Signature:		Date of review:	20/06/2026
		Document issued to (Client): Bellway Homes		Signature		Date of submission:	20/06/2026

2.0	Document Control	Issue Date:	Amendment Number:	Date Amended:	Person Amending:	Remarks
		20.06.2026	0		Agron Selita	First Issue

3.0	Document Contents				
		1.0	Project submission information	Page Number:	**01**
		2.0	Document Control	Page Number:	**01**
		3.0	Document Contents	Page Number:	**01**
		4.0	Site Description	Page Number:	**01**
		5.0	Scope of Works	Page Number:	**03**
		6.0	Preparation	Page Number:	**03**
		7.0	Access & Egress	Page Number:	**04**
		8.0	Supervision, Responsibilities and Site Organisation	Page Number:	**04**
		9.0	Labour, Management Resources & Training	Page Number:	**04**
		10.0	Major Plant & Minor Plant/ Equipment (Typical)	Page Number:	**04**
		11.0	Method of Work: Plant/ Materials and vehicle preparation and delivery	Page Number:	**07**
		12.0	Method of Work: Mains Drainage	Page Number:	**07**
		13.0	Method of Work: Installing Services	Page Number:	**12**
		14.0	Method of Work: Construction of Emergency Entrance	Page Number:	**15**
		15.0	Method of Work: Domestic Drainage	Page Number:	**18**
		16.0	Method of Work: Works on/ near Underground Services	Page Number:	**18**
		17.0	Method of Work: Spoil Heaps	Page Number:	**19**
		18.0	Method of Work: Lifting with excavators	Page Number:	**21**
		19.0	Health and Safety	Page Number:	**22**
		20.0	Discovery Strategy: Contamination – Waste Disposal	Page Number:	**25**
		21.0	Silt Management & Dewatering	Page Number:	**27**
		22.0	Applicable COSHH	Page Number:	**27**
		23.0	Immediate Emergency Procedures	Page Number:	**28**
		24.0	Site Specific Risk Assessments	Page Number:	**29**
		25.0	Hand Arm Vibration & Decibel Level Reference Chart	Page Number:	**40**
		26.0	Communication: Confirmation of Operatives Briefings	Page Number:	**43**

4.0	Site Description	The site is located north of Trumps Green Road, Surrey, approximately 100m north of the M3 motorway, and is centred at an approximate National Grid Reference (NGR) 499068,166512. The site occupies a parcel of approximately 1.8 Hectares (Ha) and slopes downward towards the south and southeast from approximately 58 to 50 m above the ordnance datum. Surrounding land uses included residential areas in the north and east. The Trumps Green Road is at the south boundary, and an open field is on the west. Existing site access located on the southwestern corner of the site will be utilised as Temporary Site access until the S278 have been approved and the permanent site access has been constructed. Site access will be off Trumps Green Road.

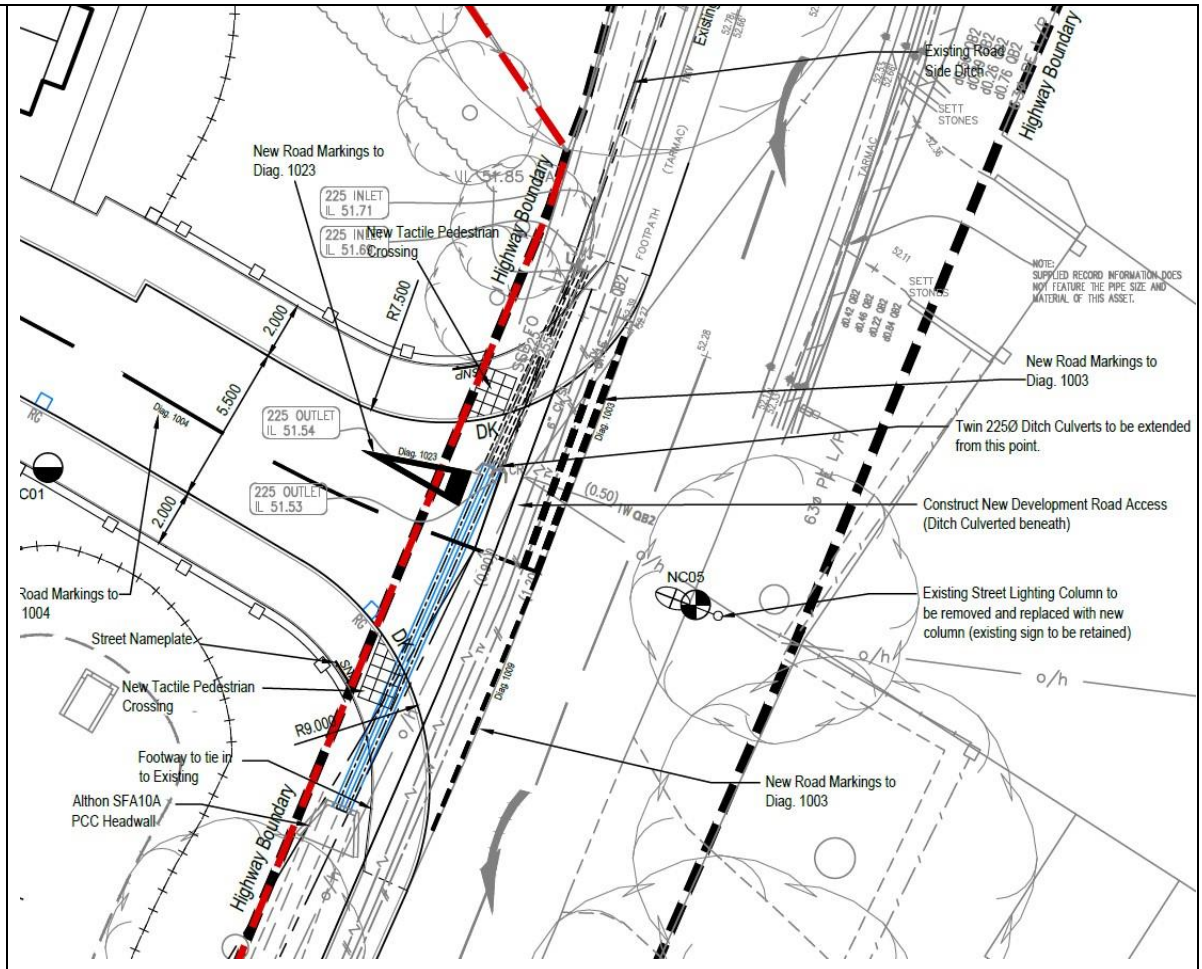
Existing Road Side Ditch
Highway Boundary
New Road Markings to Diag. 1023
225 INLET IL 51.71
New Tactile Pedestrian Crossing
R7.500
2.000
5.500
225 OUTLET IL 51.54
225 OUTLET IL 51.53
Diag. 1004
Diag. 1023
Diag. 1003
Diag. 1009
C01
Road Markings to 1004
Street Nameplate
New Tactile Pedestrian Crossing
R9.000
Footway to tie in to Existing
Althon SFA10A PCC Headwall
New Road Markings to Diag. 1003
Twin 225Ø Ditch Culverts to be extended from this point.
Construct New Development Road Access (Ditch Culverted beneath)
NC05
Existing Street Lighting Column to be removed and replaced with new column (existing sign to be retained)
NOTE: SUPPLIED RECORD INFORMATION DOES NOT FEATURE THE PIPE SIZE AND MATERIAL OF THIS ASSET.
SETT STONES
FOOTPATH
TARMAC

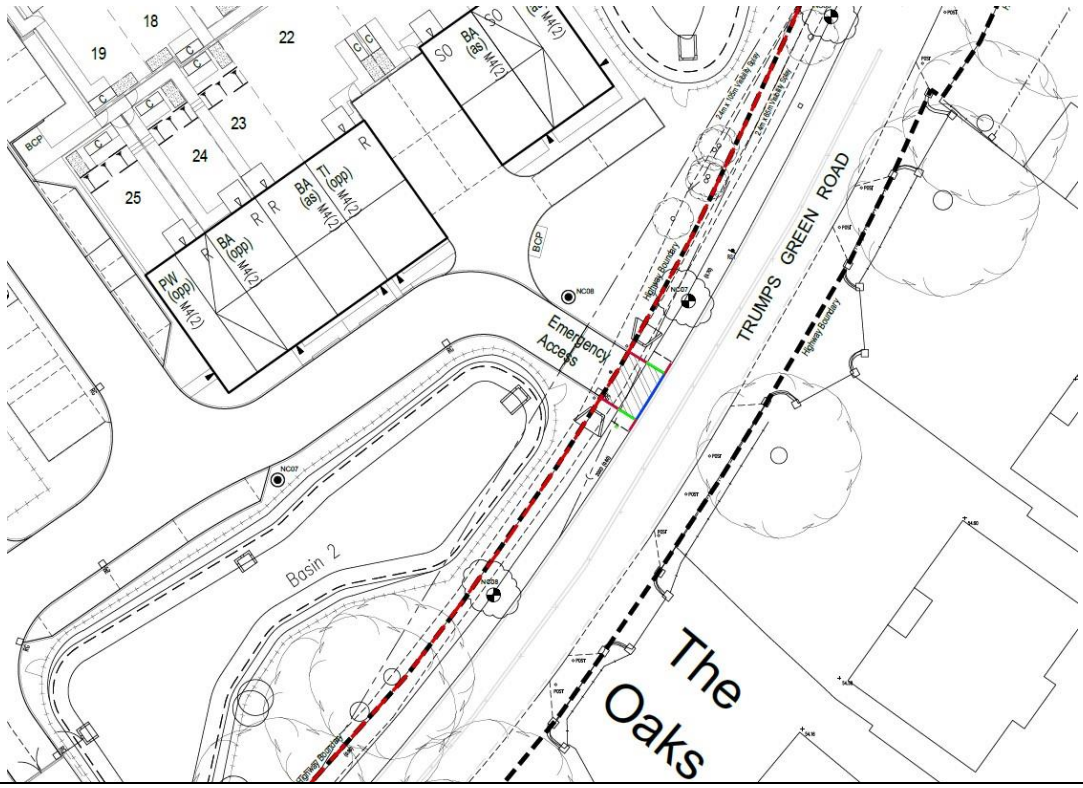
18
19
22
23
24
25
BCP
PW (opp) M4(2)
BA (opp) M4(2)
BA (as) M4(2)
TI (opp) M4(2)
Emergency Access
TRUMPS GREEN ROAD
Highway Boundary
Basin 2
The Oaks

		Restrictions and risks of developing this site are: • A reptile fencing was installed before any construction work started. Operatives will be briefed, and fencing will be maintained. • Tree protection fencing has already been erected as per the TPO drawing. • Some existing structures/ stables on-site must be demolished and removed before construction works can start. • An asbestos specialist will collect and dispose of the ACM roof sheet. • Some metal barrels found around the existing stables and the ground around the stables will be moved and disposed of as contaminated ground. • There are two existing foul drainage runs through the site. One runs northwest of the site, picking foul drainage from the residents on Knowle Hill, and the other runs from the site's western side. These drainage runs will need a conditional survey and a strategy for connecting to the site system. • There is a BT pole in the middle of the proposed site entrance that will need to be relocated or grounded. • An in-depth survey will be required for the services on the north verge of Trump's Green Road, where the proposed site entrance is. This survey will establish if any services need to be dropped to enable adoptable road formation. The construction vehicle route to the site is via M25, A320 and B386. At junction 11, Use the 2nd from the left lane to exit towards Chertsey/A320/Woking. Use the right lane to take the slip road to St Peter's Way/A320. After 0.9 miles, at the roundabout, take the 3rd exit onto St Peter's Way/A320. At Ottershaw Roundabout, take the 3rd exit onto Guildford Rd/A320. Continue for a while, and at the roundabout, take the 3rd exit and stay on Guildford Rd/A320. Traffic will continue for a further 0.5 miles, and at the roundabout, take the 1st exit onto Holloway Hill/B386. Construction traffic continues to follow B386 for 2.3 miles and will turn right onto Kitsmead Ln. After 0.6 miles, vehicles will turn right onto Trumps Green Rd. Construction traffic after 150m will turn left into the site entrance on the left side. Applicable signs will be erected to direct traffic to the site. The site entrance will be identified using signage reading works access. *Lorries and heavy-load vehicles will turn right when leaving the site.* **The construction plant will only be allowed to operate between the following hours:** **• 8 am to 6 pm, Monday to Friday.** **• 8 am to 1 pm Saturday (only if required as per the construction programme); and** • No work will be permitted on Sundays and Bank Holidays unless a requirement is identified under a statutory, i.e. Energy provider & Highways team. No deliveries are permitted outside working hours unless there is a prior agreement with site management. Vehicles arriving outside regular hours will be turned away, and Houlihan & Co will not be responsible for any costs incurred. The PC Site Traffic Management Plan also indicates the location of entrance/exit gates, laydown areas, and material storage areas. Vehicles will not be allowed to be reversed out of site access.

5.0	Scope of Works	**A Hold point has been introduced to our safe system of works company-wide.** **"Any remedial works required due to non-conformity or not to quality assurance and require remedial works that are not part of this approved safe system of works shall be risk assessed and remedial documentation produced were required".** **Enabling works** **5.1** Construction of emergency entrance **External Works** **5.2** Tarmac Road. **5.3** Street lighting, feeder pillars excluding connections. **5.4** Street furniture, including signs, illuminated signs, benches, bins, tree grills, bike racks, etc. **5.5** Road markings **5.6** PCC edging/s **5.7** BN Kerb/s (including radius, dropped and transitions) Note: Task-specific method statements & associated risk assessments will additionally be drafted at the health and safety representatives, site supervisors or site agent's discretion.

6.0	Preparation	**Pre-start on site:** • Site perimeter hoarding is to be put in place by others. • No works on the north of the site near overhead power lines. • Everyone working on site must be briefed on silt management, pollution prevention, reptile fencing and tree/ root protection. • All operatives must be inducted and signed to their appropriate RAMS. **Pre-Start Each Day:** • Every morning before each shift, no operative / sub-contractor must commence work without attending a daily briefing held by the site work supervisor at the site compound no later than 0730hrs, where the day's task/s and associated risk/s will be addressed, planned and possibly challenged if operatives have any concern. • Toolbox talks must be undertaken after the daily briefing with the operatives who are about to engage in high-risk work, such as working

		underneath powerlines, excavating on/near live services, deep excavation activities, work in the public highway, confined space work, etc. • Check if there are any changes to the traffic management on site. • Carry out CAT scan surveys of proposed excavation areas routinely & review existing utility plans. • Ensure no other trades or public are working along the lines of the proposed works. • Check that all drawings are current and are the latest issues. • Cordon off the work area from other personnel and traffic not involved in the work. • Ensure that the area of work is closed and that there is no access permitted by the public. • Carry out Topographical Survey: Agree levels with client. • The team or teams involved will carry out a task-specific briefing and sign off on it. If the work is on or near live services, the prestart procedure will be followed in addition.

7.0	Access & Egress	• The construction vehicles would access the site off Trumps Green Road on the existing site entrance on the southwestern corner. A temporary site entrance will be used until the permanent one has been constructed. • All Lorries and Traffic Movement will be banked through the gates and around the site to the area of discharge /loading via banksman, who will also be responsible for maintaining a mud-free access road.

8.0	Supervision, Responsibilities and Site Organisation	• U Farruku – Site Supervisor: 07879821511 • C. Conway – Site Engineer: 07969 274317 • T. Keyes – Contract Manger: 07799897835 • R. Carroll - Construction Director: 07884 490755 • R. Knight - Managing Director: 07775 625 421 • A. Selita - H&S advisor: 07920 190127 • T.Keyes - Temporary Works Co-ordinator: 07799897835 • U Farruku - Temporary Works supervisor: 07496978868

9.0	Labour, management resources & training	• Sufficient time and resources will be available to undertake the work. The works described will be undertaken by one gang of 10-15 operatives under the supervision of a competent Supervisor and Site Engineer, and the Contracts Manager, Tom Keyes, will visit the site as often as required. • The Contracts Manager, Tom Keyes, will report to our Construction Director, Richard Carroll, who will visit the site regularly. The Health and Safety Advisor, Agron Selita, will visit twice monthly to monitor compliance with the Method Statement and risk assessments and produce a monthly safety report sent to Bellway Homes. He will also carry out investigations of all site accidents and near misses. • The site supervisor will ensure the perimeter is secure after every shift. They will inspect open excavations before work starts and record results. There is no site security. The site supervisor will conduct a weekly site inspection, environmental inspection, Loler for lifting equipment, and weekly plant checks and arrange to check the site's security at the end of each shift. • All our operatives have undertaken safety training within the last 2 years. Our Managers and Directors have also attended Safety Courses. All personnel have a health and safety training schedule to undertake over the next 2 years to maintain our high standards. • Machine operators are all certificated to CITB standards, and copies of certification are readily available from the Head Office. • Our entire workforce has presently achieved or is undergoing on-site assessment via the CITB experienced worker route. This leads to National Vocational Qualifications in General Construction and Plant Operations for all relevant plant categories. Our whole workforce will then be accredited under the Construction Skills Certification Scheme. • All plant operators will be either CPCS or NPORS accredited and hold an NVQ in the relevant Plant Operations category with lifting operations endorsement/ NVQ in lifting with an excavator. Please note that the NVQ is the senior qualification and is regarded as such by the HSE. The card schemes are regarded as little more than passport schemes, though the underpinning knowledge content is increasing annually. • If machines are hired with drivers, these qualifications will be required of the incoming drivers. • All banksmen will be either NPORS trained on N403 – Vehicle Marshall, or L2 NVQ certified in Plant Operations (Construction) – Movement Guide Marshall A/506/4668 • Note- Regardless of qualification, all plant operators must be formally authorised as competent by the Houlihan site supervisor on the H&Co plant operator authorisation register. • All personnel on site will have CSCS/ CPCS/ NPORS accreditation as relevant. • Every operative new to the site will be included in a site induction, which will be held in an open space. • Our site induction will include a brief questionnaire about health problems, and the data will be held off-site securely—NI number and address. This will be separate from new starter employment details and is a first scan for signs of modern slavery.

10.0	Major Plant & Minor Plant/ Equipment	Major Plant (Typically): ONLY ROAD WORTHY PLANT TO BE USED ON SUCH WORKS JCB JS 135/140/160/220 6t/9t/10t forward tipping dumper 80/120/135 Ride on roller JCB 535 -125 Telehandler *(Refer to H&Co's site safety OHSEQ notice board for current records & registers)* Note: The machine operator carries out all Weekly Check Sheets for 360's and will always be available within the cab for inspection, including the most recent through examination certificate; copies are also kept in H&Co's site office (OHSEQ board). Excavators will have to monitor cameras fixed in the rear of the machine for all-around vision. Any machine that is not fixed with a camera and is not carrying out bulk earthworks will be accompanied by a Banksman. Major Plant that does not have cameras fitted will achieve all-around vision using mirrors.

We will continue to promote the "thumbs up" campaign.
Green flashing beacons are fitted across the Company. The new plant will come equipped.

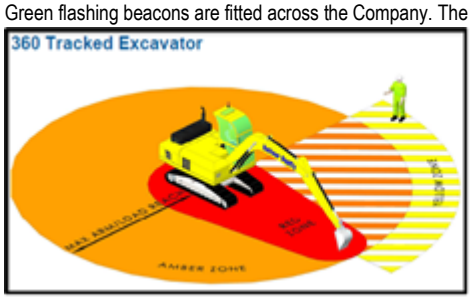

Banksman

- The banksman must be situated in a safe position and preferably outside the operational area of the machine's fully extended boom, dipper and attachment.
- The banksman must face the operator when signalling and be clearly visible to them.
- The banksman must always maintain a clear line of sight with the excavator operator.
- The banksman must have direct sight of the load and lifting equipment at all times during the lifting operation and have adequate visibility of the load path.
- The communication between the operator and banksman must be continuous throughout the duration of the lifting operation

Plant Operator/ 360° Machine Driver

- The operator must not respond to any hand signals (or other communication) that are not clearly understood and should seek additional clarification.
- Hand signals and any additional voice instructions should only be given by the identified banksman – except for an emergency stop, which any person can give at any time if a perilous circumstance is spotted.
- If other instructions are required (other than the agreed hand signals), then the operation should be stopped. Where there is any concern about the safety of, or the need to halt, the operation, all movement (and therefore, the lifting and any operation) should be stopped until the issue has been resolved to the mutual satisfaction of both the operator and the banksman. Comprehensive

Telescopic Handler JCB 535-125

JCB 525-125 will be utilised with the fork attachment to move Heras panels and on-site materials. The Telescopic handler operator will have the relevant NPORS/CPCS endorsements and be competent to operate the plant. The telescopic handler operator will be briefed on his duties and made aware of the 4.5m height restriction set on site. A safety clearance of 5.3M will be achieved at all times.

- 3500kg Maximum lift capacity with stabiliser extended.
- 8.06m maximum forward reach with stabilisers extended
- To maintain stability, the telehandler should be used on firm-level ground that resists the sinking of the wheels or stabilisers.
- Telehandler should be stationary with the brakes applied, lifting normal loads.
- A marshaller will accompany all telescopic handler movements.
- Reversing is to be kept at a minimum with the marshaller present, and turning points are to be used when applicable.
- The operator should follow the manufacturer's instructions for travelling on slopes and inclines. It is essential that they do not attempt to climb, descend, or cross inclines in excess of the manufacturer's limiting values, as this significantly increases the likelihood of overturning.
- The operator will complete daily checks every morning. If any issues are observed, do not operate the telescopic handler. Please notify the site supervisor and do not operate until remedial action has been taken.
- When travelling with a load, the load should point up-slope and tilted back, regardless of the direction of travel. This will keep the load from shifting and falling off the forks.
- When travelling without a load, the forks should point down-slope, regardless of the direction of travel. This will improve stability, traction, and adhesion and apply regardless of the direction of travel.
- Any loads should be strapped and properly secured on the grid of the forks.

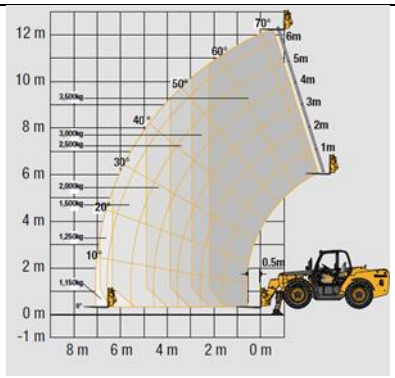

Minor Plant & Equipment (Typically):

- Block Grab
- Concrete Skip/Bucket
- Excavation Support Equipment
- Setting out Instruments
- Compressor & associated pneumatic tools
- Heras Fence Panels / Avalon barrier
- Shovels Inc. insulated
- Hand Tools
- Small electrical tools
- Kerb lifter/ laying dolly
- Block barrow
- Pipe Lifter
- Rammax

Minor plant will be visually checked prior to use. Any defect or failure noted during pre-use checks will be reported immediately to the site supervisor. The site supervisor will remove from use the equipment as "Out of Order/service" and report it to the Plant Department for repair or replacement.

11.0	Plant/ Materials and vehicle preparation and delivery	• Contract Manager and Site Supervisor to assess the works and identify the hazards and control measures that need to be put in place to avoid the exposure or to minimise the risk to a reasonably acceptable level. • They will be responsible for selecting the correct equipment for the task and the personnel trained to carry out the task. • A Task Activity Briefing must be held with the team carrying out the Task, and they must be briefed on the hazards identified, control measures that will be applied, plant and equipment used, work package plan, detailed drawing, and every member of the team must understand and sign the briefing sheet. • Work must stop when the weather conditions, or any other circumstances change. The risks must be assessed and control measures applied to mitigate these risks before work commences. **Refer to** RA_23 Unloading Vehicles Unless it is reasonably practicable to do so, the following safe systems of work must be followed at all times. • The Low Loader Driver will sign in at the site entrance or Site Office before delivering the plant. • Plant deliveries are not to be made outside site working hours unless previously agreed upon with the Site Manager. • Lone Working is not permitted, and deliveries are not to be made unless a staff member is present on site. • Plant deliveries are not to be made in areas without adequate lighting. • The vehicle collecting the plant shall be a vehicle designed for the collection, transportation and delivery of mobile plant, be it wheeled or tracked. Low Loader. • The vehicle must have a suitable means of getting the plant onto the trailer and will include designed loading ramps. • The Low Loader driver must be a competent person trained in the loading/unloading of all categories of plant from the lorry and for its security during transport. • All loading/unloading operations shall be supervised by a competent person. The Low Loader driver shall act as the competent person. • All plant shall be loaded/unloaded onto the low loader by a competent plant operator only and directed by the lorry driver only. No other person shall undertake these instructions. The low-loader driver can unload the plant, provided he is qualified to do so. • During the plant loading/loading operations, all persons other than the plant operator and lorry driver shall stand away from the loading area. • During access to the lorry platform, if there is a risk of personal injury from a fall, a means of preventing a person from falling off needs to be installed, or the use of a safety harness must be implemented. All such persons shall be trained in the risk of falling off the lorry platform and how to control those risks. Where clients provide access platforms/podiums, these must be used. • Prior to moving all loaded plant, they shall be adequately secured by the appropriate means, such as chains, etc., by the low-loaded driver only or assisted by others working under his instructions • The driver shall determine the route and final resting place of any plant to be loaded/offloaded before the activity commences. • The driver shall also ensure the plant/materials loading/unloading route is clear of all hazards, obstructions, restrictions, etc. if the operations commence. • All suppliers have been asked to follow industry guidelines regarding working at height on their vehicles. A solution for each load will have been determined before the load is dispatched, and loads that cannot be safely unloaded will be turned away. • Loads, depending on banding or shrink wrapping, must be strapped to include each row and, in addition, strapped twice perpendicular to straps on each row. Note: no individual must enter the bed of a lorry without edge protection.

12.0	Method of work Mains Drainage	• Contract Manager and Site Supervisor to assess the works and identify the hazards and control measures that need to be put in place to avoid the exposure or to minimise the risk to a reasonably acceptable level. • They will be responsible for selecting the correct equipment for the task and the personnel trained to carry out the task. • A Task Activity Briefing must be held with the team carrying out the Task, and they must be briefed on the hazards identified, control measures that will be applied, plant and equipment used, work package plan, detailed drawing, and every member of the team must understand and sign the briefing sheet. • Work must stop when the weather conditions or any other circumstances change. The risks must be assessed and control measures applied to mitigate these risks before work commences. **Refer to** **RA_12** Excavations / Trenches **RA_11** Operating 306° Excavators **RA_10** Operating Forward Tipping Dumpers **RA_06** Cutting Concrete**,** kerbs, blocks, edges, pipes. **RA_38** Pouring Concrete **Installing the Proprietary Trench support – Trench Box, Manhole Box, Trench Sheet Piled** **COSHH** – Wet Concrete / Mortar Silica Cement Petrol **HAV / Decibel Chart** for the Petrol Saw **21 MoW** Lifting with excavators **and Lift Plan** – for lifting pipes, manhole rings, and bases into position.

Setting out / Earthwork preparation & installing proprietary support systems:

All excavation works will be carried out in accordance with Construction (Design and Management) Regulations 2015 and the guidance from the CPA "Be Safe - Shore" guide to Trenching Practices.

Before any excavation, a Permit to Dig must be raised, an existing utility drawing must be on-site, and the excavation area must be scanned using Cat & Genny.

Excavations left open will be inspected regularly. Inspections will be carried out before each shift starts, during heavy rain or other events affecting stability, or after the fall of materials. One inspection will be recorded each week on the excavation inspection records book.

- Set out the extent of the run/s, ideally commencing from the terminal connection or lowest point.
- The extent of the proposed drainage run must be subject to a reduced level dig so drainage trenches are dug at reduced levels; ideally below the proposed road formation/level.
- Identify and supply appropriate earthwork support – such as proprietary trench and manhole boxes. Note: support systems must be set up in accordance with the installation guidance provided by the preferred supplier.
- Conduct existing survey investigations, including marking on the ground any potential services in close proximity with the use of CATs and excavating trial holes to ascertain actual line and depth.
- Identify access, movement and storage areas and erect safety exclusion fencing to enclose the works.
- The perimeter of the proprietary earthwork support systems should be sprayed on the ground of the proposed dig so that the excavator operator can cut the trench/ excavation tight and ultimately prevent voids around the in-situ boxes.
- Commence excavation, initially to a suitable depth to allow installation of the trench box, typically 1.00m below ground level (b.g.l).

Please note that in unstable conditions, the box will be installed at a higher level and adjusted as the excavation proceeds.

- In excavations 2.4m and below, it will be necessary to use an additional base or top box section or to terrace the top of the excavation. Ensure that the handrails and ladder access platform are installed.
- Remove all excavated material from the excavation area to prevent imposing an unnecessary load onto the excavation face. – the material should be kept a minimum of the excavation depth away and immediately used for backfilling as soon as the earthwork support system has been extracted.
- Installation of the box by hooking a suitable set of 4-leg chains to the specified lifting eyes attached to the designated lifting eye on the 360° excavator's quick hitch.
  - Continue excavation within the confines of the box to the intended level.
  - Where there is doubt, provide gas testing/monitoring equipment and fix it at an appropriate position in the excavation to provide sureness.
  - Install the dedicated access platform to the trench/manhole box and fix the ladder and guard rails prior to entering the trench/ manhole box.
  - Place clean, washed shingle/concrete bedding using the excavator bucket. Materials will generally be discharged into a drag skip or alternatively in the skip of a dumper.
  - During the placement of any material/product into trenches, all operatives must evacuate the excavation.
  - Dumpers must not directly tip into the trench.

Recommended excavator bucket selection (mm) versus pipe diameter (Ømm):

150Ømm – 450mm / 225Ømm – 600mm / 300Ømm – 600mm / 375Ømm – 750mm / 450Ømm – 750mm / 525Ømm – 750mm / 600Ømm – 900mm / 675Ømm – 900mm / 750Ømm – 900mm / 900Ømm – 1200mm or 1350mm / 1050Ømm - 1200mm or 1350mm / 1200Ømm – 1500mm or 1800mm / 1500Ømm – 2100mm

Pipe laying (clay): Nominally foul sewers

Clay pipe weights: Suitable to manually lift / Unsuitable to lift manually

100Ø x 1.6m (L) weigh 15kgs / 150Ø x 1.00m (L) weigh 18.5 kg / 150Ø x 1.75m (L) weigh 31 kg / 225Ø x 1.75m (L) weigh 61 kg.

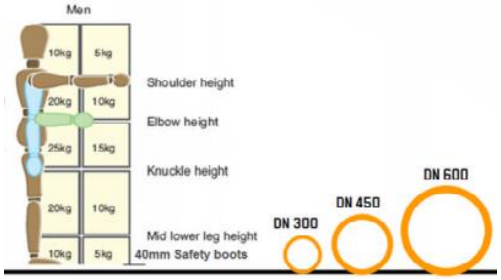

- Pipe laying will commence and should (but not always necessary) start at the downstream end. The pipes are usually laid with the sockets upstream.
- Operatives can manually place pipes of 150Ø or below depending on the excavation depth; pipes can be passed down or lowered manually utilising a web sling. As appropriate, pipes will be aligned using a string line or pipe laser.
- Ensure that the inside of the coupling and the exterior of the spigot is clean.
- Spread a lubricant layer over the pipe end to the required insertion depth and push the coupling home onto the pipe.
- The pipes shall be laid true to the line and level within tolerances specified by the design. Any necessary adjustments to the level shall be made by raising or lowering the bedding, always ensuring that the pipes are finally provided with support along their whole length. Adjustments to level and position shall not be made by local packing.
- Lower the next pipe into the trench, inserting the pipe into the coupling of the pipe previously laid.
- All pipe laterals must be capped with suitable plugs/caps – not scrunched-up bags/packaging, etc.
- Each run or section will be tested before and after backfilling, and this will be carried out in accordance with the recommendations set out in BS

EN 1610:2015.

- The larger pipes 225Ø+ will be placed by the excavator, pre-slung with 2x choked web slings by a slinger/signaller and lowered into position in the excavation. Note – there must be no operative within the proprietary earthwork support system whilst any load is being slung overhead – especially clay pipes, due to their vulnerability to shattering and producing razor-sharp fragments.

Pipe cutting (Clay):

- Pipe chain cutter for 100Ø & 150Ø pipes - Cutting shall be performed with the correct tools, and as recommended by the pipe manufacturer, cuts shall ensure adequate performance of the ensuing joint.

*This procedure should be followed to ensure a good quality cut with a Lever action pipe chain cutter (100mmØ & 150mmØ clay pipes **MUST** be cut with a pipe chain cutter as follows):*

- Make a clear mark around the circumference of the pipe at the desired length.
- Pass the chain under the pipe, aligning the cutting wheels on the desired mark.
- Hook the chain link onto the jaw of the pipe cutter.
- Tighten the chain upon the pipe by closing the arms of the lever cutter together.
- Make a final check for the chain's correct alignment with the pipe, then continue to increase the chain tension until the pipe cuts.
- After cutting, any sharp edges may require trimming with an emery stone. Pipe trimmers are used for both 100mm and 150mm diameters.

Powered Masonry Saw:

- A powered masonry saw can be used to cut any diameter of pipe we use. Generally, 100Ø & 150Ø diameter pipes are cut with a pipe chain cutter for speed and efficiency.
- 225 & 300Ømm pipes are generally cut by a powered masonry saw using a diamond-tipped blade.
- When using a powered masonry saw, follow a safe system of work: Note that only authorised individuals should use an abrasive wheel. They must have received training on the use of an abrasive wheel and have had a face fit test on the FFP3 mask that they will be using.
- Before any pipe-cutting operation starts, read and adhere to the safety and operating instructions of the masonry saw and the blade manufacturer.
- Check that the masonry saw is fitted with the correct blade specification.
- Make sure the dust suppression water bottle is full, connected to the petrol saw, and working.
- Make a clear mark around the circumference of the pipe at the desired length.
- The pipe being cut should be positioned horizontally and stable.
- Care should be taken to support and secure both halves of the pipe created by the cut to avoid the blade being nipped as the pipe separates.
- The operative using the petrol saw must wear task-specific PPE, including Goggles, Ear defenders, an FFP3 dust mask, and gloves. Making one continuous cut generally achieves the best quality cut.
- After cutting, any sharp edges may require trimming with an emery stone.

Note- Short-length pipes should be ordered directly from the preferred supplier to minimise on-site cutting operations.

Backfilling:

- Withdraw earthwork support when backfill reaches the underside of waling.
- In the first stages of backfill, selected material should be placed uniformly on both sides of the pipe by hand in layers not exceeding 100mm in thickness, each layer being compacted by hand tamping until the pipe has a minimum of 150mm compacted cover.
- Further backfill should be placed in layers not exceeding 300mm, each layer being well compacted. Mechanical compaction equipment should not be used until there is a minimum of 450mm of compacted material above the crown of the pipe.

Pipe laying (PCC): Nominally surface water

PCC pipe weights: Suitable to manually lift / Unsuitable to lift manually

225Ø x 1.25m (L) weigh 122kg / 300Ø x 1.25m (L) weigh 217kg / 300Ø x 2.05m (L) weigh 420 kg / 375Ø x 2.5m (L) weigh 510 kg / 450Ø x 2.5m (L) weigh 705kg / 525Ø x 2.5m (L) weigh 900kg / 600Ø x 2.5m (L) weigh 1200kg / 675Ø x 2.5m (L) weigh 1275kg / 750Ø x 2.5m (L) weigh 1924kg / 825Ø x 2.5m (L) weigh 1820kg / 900Ø x 2.5m (L) weigh 1920kg / 1050Ø x 2.5m (L) weigh 2590kg / 1200Ø x 2.5m (L) weigh 3550kg.

- Once the trench has been excavated to the specified line and levels and the proprietary earthwork support system has been adequately installed with handrails and a ladder access platform attached.
- Before lowering into the trench, each unit should be inspected carefully for any damage which may have occurred in transit or during handling and storage on site. Pay special attention to jointing surfaces. Units should be lowered carefully into the trench with tackle suitable for their weight and for the depth of the trench.
- Pipe laying will commence and should start at the downstream end. The pipes are usually laid with the sockets upstream.
- Trenches should be kept to the specified width since any increase in trench width will increase the load on the pipe and the quantity of excavation and will also require more bedding material.

Using a proprietary pipe-lifter:

Pipe lifters are specifically designed to allow excavators to quickly and efficiently pick up and place a wide range of concrete pipes without an operative contacting either the pipe or the pipe-lifter.

No operative should be within the excavator's fully extended radii in transit.
All users must be familiar with the pipe lifters manufacturer's 'user guide'.
Prior to delivery of any concrete pipe, ensure the correct pipe lifter head is compatible with the appointed excavator/s.
The pipe lifter must have a current thorough examination certificate valid within 6 months – this also must be logged on the OHSEQ site notice board clipboard – lifting accessories register.
The most common pipe lifter we use is from MGF. This particular item has been tested to a SWL of 3.7t and designed for use with collared concrete pipes ranging from 300Ømm - to 1200Ømm and a maximum length of 2.6m (our max purchased pipe length is 2.5m).
The clamping plate has TWO available settings: an upper hole for clamping 300Ømm - 450Ømm pipes and a lower hole for use with 525Ømm - 1200Ømm pipes. (see photograph below).

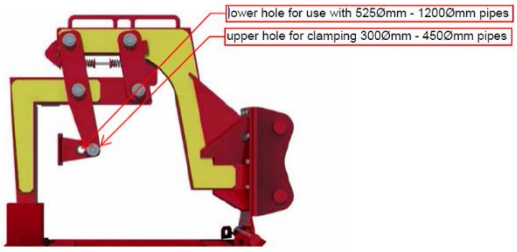

If the adjustment must be undertaken on-site, ensure it is carried out while the lifter is stabilised and contained within its stillage. Two operatives are required to perform the task. Remove the securing bolt and collar, and carefully remove the 40mm diameter pin. Reposition the clamp to the required hole, slide the pin back in place, slip over the collar, and tighten the M10 bolt.
When the pipe-lifter is not in-use it must be placed in a bucket/attachment area for safe storage and coupling.
When the pipe-lifter has coupled a load and raised it 2 feet above ground level, the operator must confirm that the load is stable by tilting the pipe + &—15° from horizontal.

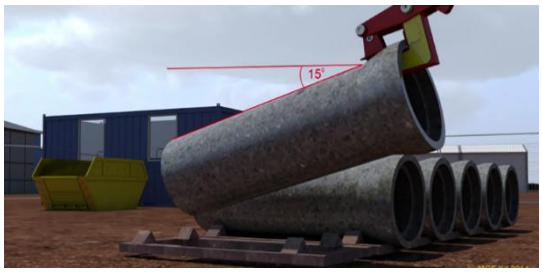

If the pipe is stable and correctly coupled, the pipe may be lifted and transferred to a suitable storage location or placed into a prepared trench and jointed following the application of a lubricant to the pipe spigot and visual inspection of the socket profile checking for any fractures or obvious damage. Note- care should be taken to prevent the lubricant from coming into contact with the pipe or equipment, as this can cause the pipe to slip.
Pipes being lifted must be kept as near the ground as is practicable and never lifted over operatives.
Upon reaching the trench, the pipe is attached, and the excavator is stabilised. The excavator will carefully begin to lower the pipe into the required position.

- The pipe may be tilted up to 30° from horizontal and manoeuvred between the struts of the trench box. During the operation, ensure neither the pipe lifter nor the pipe snags other equipment or the ground, as this could lead to a dangerous release of the pipe-lifter.
- For all operations ensure that the pipe is being laid on suitable ground/bedding and the pipe is chocked/backfilled to prevent unexpected

movement.

- The pipe lifter can be used to push the pipe into position. Care must be taken when jointing to ensure that pressure is even being applied to the gasket. No personnel should be in the working area or come into contact with the pipe lifter, excavator, or any pipe in transit or installation.
- **IF** personnel are required inside the trench, then the operative must stand well behind the collar of the previously installed pipe (as per the illustration below).

Alternatively, if a pipe lifter cannot be used due to size or weight

- Jointing chains or appropriate straps can be used to carefully lift and guide pipe spigots into the previously laid pipe sockets, taking care not to disturb the jointing ring or damage the jointing surfaces.
- The spigot should be offered up to and centred carefully into the receiving socket.
- The pipe can now be allowed to rest on the bedding material (alternatively the pipeline can be back-laid i.e. new pipes laid with the socket offered up to previously laid pipes spigot – special attention should be made to ensure the socket does not scoop up bedding material and hence contaminating the joint when laid using this method).
- The sling must be wrapped around the barrel of the pipe in a choke at the balance point. Position the bight for the choke lift at 120°(natural angle) – as per the sketch below:

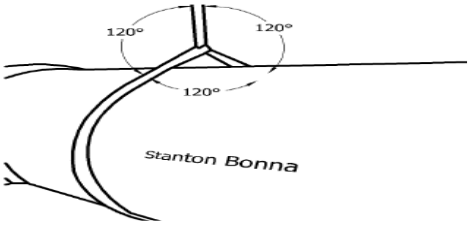

Using the excavator bucket or pulling the pipe home with a strap/jointing chains, which are common methods of completing the joint. If using the excavator bucket to push the pipe home, always place a timber between the back of the bucket and the pipe socket (spigot if back-laying). Apply a steady, even pressure until the pipe is in its final joint position, with the joint gap being within the recommended limits of between 10-25mm (joint gap measured internally).

ENSURE NO OPERATIVES ARE WITHIN THE TRENCH WHILST THE BUCKET IS APPLYING PRESSURE AGAINST THE TIMER PUSHING THE PIPE INCASE THE TIMBER BREAKS AND STRIKES AN OPERATIVE IN CLOSE PROXIMITY – NOTE THIS HAS HAPPENED WITHIN THE INDUSTRY BEFORE AND RESULTED IN A FATALITY.

As shown below: (Jointing with the excavator bucket).

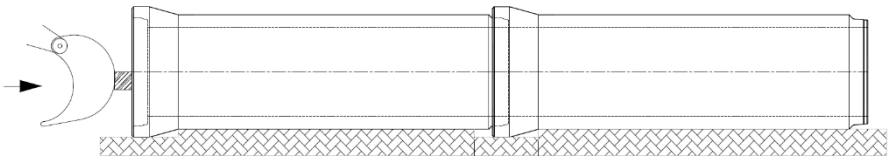

Note: The mechanical plant must not be used to press pipes down to their correct level.

Groundwater should be kept below the bottom of the trench by use of temporary drains and not allowed to rise before backfilling is complete.

All pipelines, especially those for foul sewers, are tested after each independent pipe is laid and prior to backfill.

Manhole installation:

Recommended excavation size/manhole box to suit manhole Ømm:

Manhole Ø	Square Manhole box dimensions	Comments
1050Ømm, 1200Ømm, 1350Ømm	2.5m(L) x 2.5m(W)	1350Ømm (tight)
13500Ømm, 1500Ømm, 1800Ømm	3.0m(L) x 3.0m(W)	1800Ømm (tight
1800Ømm, 2100Ømm	3.5m(L) x 3.5m(W)	2100Ømm (tight)
2100Ømm, 2400Ømm, 2700Ømm	4.0m(L) x 4.0m(W)	2700Ømm (tight)
2700Ømm, 3000Ømm	4.7m(L) x 4.7m(W	None
3000Ømm, 3660Ømm	5.0m(L) x 5.0m(W)	None

Manhole excavations will be conducted/supported similarly to the previously mentioned drain runs and will have PCC chamber sections placed by the attendant excavator.

- Again, operatives will leave the excavation until the PCC chamber ring is near the intended position and is stable.

		• The section will be manually guided into the final position on the concrete/shingle bed or previous section. Note – the second and subsequent PCC rings must not be installed until all benching has been undertaken. • Once the benching has been undertaken with the additional sections installed and the manhole is a traditional type (not pre-formed), a concrete manhole surround steel shutter will be lifted into place, along with the surround safe handrails. • Once the concrete has cured, the shutter will be removed, and the cover slab will be lifted into position; there are usually lifting anchors on the face, allowing the use of a hook and chain. **Backfilling:** • Withdraw earthwork support when backfill reaches the underside of waling. • In the first stages of backfill, selected material should be placed uniformly on both sides of the pipe by hand in layers not exceeding 100mm in thickness, each layer being compacted by hand tamping until the pipe has a minimum of 150mm compacted cover. • Further backfill should be placed in layers not exceeding 300mm, each well-compacted layer. Mechanical compaction equipment should not be used until there is a minimum of 450mm of compacted material above the crown of the pipe. **Producing as-built drawings & testing:** On completion, the run will be marked on the as-built record drawing, together with the dates of the tests and inspections. **Emergency Plan:** • If there is an emergency at the bottom of an excavation, then initial assessment by first aiders will establish if the IP can be moved or must be stabilised in situ pending the arrival of paramedics. • Until and unless agreed first treatment can be carried out in situ, preparation for paramedic access and subsequent evacuation by stretcher will immediately begin. • In the event of evacuation being necessary, this will be achieved down to 5.0m. BGL by the excavator pulling a ramp toward the run being pulled to an angle of approximately 20°. The sides of this ramp will then be reduced to allow safe access and egress by paramedics. • If the ramp cannot be pulled in the direction of the run, the excavator will move around to the opposite end of the boxes, where the pipework has already been installed, and a ramp will be constructed in the opposite direction to the run. • Below 4.5.0m. A davit arm will be provided and attached to the box side. A rescue stretcher will be available at ground level for deployment as necessary. We will always try to bring the paramedics to the casualty, not evacuate the casualty unless there is danger compromising their staying in situ with first aiders stabilising the situation. The ramp for entry and egress with the casualty is by far the safer method, and we will be using it as the first choice down to 5.0 m. This stems from the experience of bringing up an injured person from the bottom of a trench, which is at great risk to him and the rescuers.

13.0	Method of work Installing Services	• Contract Manager and Site Supervisor to assess the works and identify the hazards and control measures that need to be put in place to avoid the exposure or to minimise the risk to a reasonably acceptable level. • They will be responsible for selecting the correct equipment for the task and the personnel trained to carry out the task. • A Task Activity Briefing must be held with the team carrying out the Task, and they must be briefed on the hazards identified, control measures that will be applied, plant and equipment used, work package plan, detailed drawing, and every member of the team must understand and sign the briefing sheet. • Work must stop when the weather conditions or any other circumstances change. The risks must be assessed and control measures applied to mitigate these risks before work commences. **Refer to** **RA_12** Excavations / Trenches **RA_11** Operating 306° Excavators **Preparation** Before any work is carried out, the following items must have been completed, and copies of relevant documents are available at the site of the works: • Accurate plans showing all existing services in the vicinity of the work site. • Plan of proposed new services trench. • Correct signing & guarding implemented as per TMP. The actual width of the trench depends on the following factors: - Type and size of services being laid. - Number of services being laid in the same trench. - If low and high-voltage cables are being laid in the same trench, the effect on the cable ratings must be considered. - Whether ducts are being used. - If mechanical means are being used in order to excavate the trench to install a single cable, then the width can be as narrow as 150mm. - The trench width must also allow for mechanical compaction. Trenches should: - - Be as straight as possible. Where bends are unavoidable, the trench should allow the service to be installed at a minimum bending radius of not less than. - Be to the approved dimensions and normally have vertical sides which should have a side support system (e.g. timbering), should the

ground be soft or loose.

- Have a firm and smooth contoured base.
- Be cleared of water by pumping to prevent the risk of the trench collapsing and hazard to the general public, especially trespassing children. In locations where flooding can occur, measures shall be taken to divert rainwater away from the trench (e.g. use of sandbags).
- Have provisions made during their excavation to cater for person and vehicle' access to the property of places alongside the route.
- In concrete surfaces, be cut through the concrete as per the HAUC

Specification for the Reinstatement of Openings in Highways.

When machines are being used for excavation, and the location of other plant is known, the plant should be uncovered by hand excavation to reduce the possibility of damage. If the excavation is likely to reduce the stability of any part of any structure, work shall not be commenced unless adequate precautions are taken to prevent the structure from collapse or deterioration. Flooding or vibration from heavy traffic can cause a collapse of trench sides and the subsidence of adjacent structures. A trench-side support system or shoring shall be used to avoid this.

Where service trenches are to be left open for any time, MGF Walksafe or similar will be installed and maintained to provide safe access to plots.

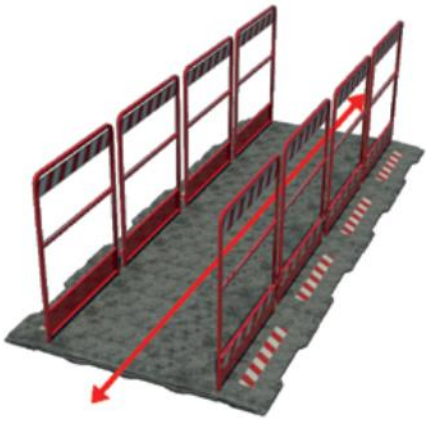

When machines are being used for excavation, and the location of other plant is known, the plant should be uncovered by hand excavation to reduce the possibility of damage. If the excavation is likely to reduce the stability of any part of any structure, work shall not be commenced unless adequate precautions are taken to prevent the structure from collapse or deterioration. Flooding or vibration from heavy traffic can cause a collapse of trench sides and the subsidence of adjacent structures. A trench-side support system or shoring shall be used to avoid this.

Excavating service trench

Excavation

All excavation works will be carried out following Construction (Design and Management) Regulations 2015 and the Guidance contained in Health and Safety in Excavations HS(G) 185 "Be Safe and Shore" and CIRIA guide to Trenching Practice.

Before any excavation, a Permit to Dig must be raised, an existing utility drawing must be on-site, and the excavation area must be scanned using Cat & Genny.

- Each drainage run opened at any one time will not exceed 50m. Where practicable, we will backfill excavations overnight. In the event that excavations are left open, they will be physically barriered off. The foreman will check the face of the excavation before the start of the shift. Any excavation will be checked after events such as heavy rain, which might affect its stability. The checks will follow Houlihan & Co.'s checklist. All inspections will be recorded in the Houlihan Record book.

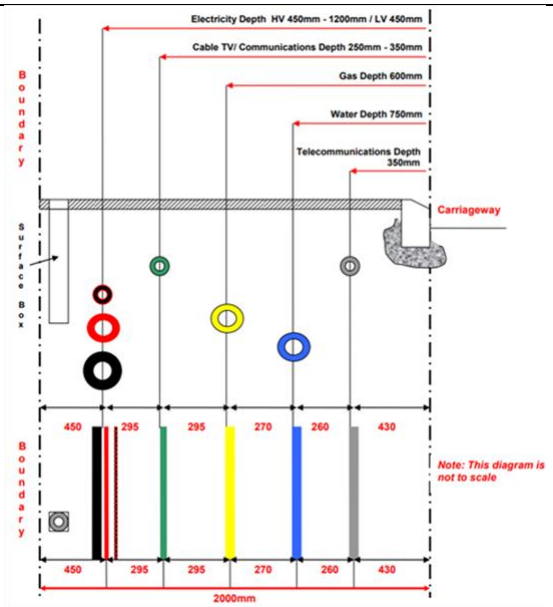

- Apparatus must be installed below the carriageway construction layers unless special arrangements have been made with the relevant authorities. Where plant can only be laid on the road, adequate protection should be provided. Ducts will be laid and sanded to specifications, and warning tape will be placed over the ducts.
- Pre-tender information and Construction Phase Plan will be used and considered in light of additional information from utilities' plan drawings, section drawings from utility companies recording depth of services and commissioned ground probing radar surveys as necessary.
- The assumption that live working can be avoided as the default position is set out above, and a full justification of any live working must be set out before this is considered. A method statement for live working will be required as live working is not considered to be properly controlled by any permit-to-work system. HSG47 states, "Where new services such as electrical or gas supplies are being installed, it may be possible to reduce risks by not installing or commissioning them until other groundworks and work on the installation have been completed. This should be considered early in the design process to allow the works to be sequenced accordingly."
- A cable avoidance tool in conjunction with a transmitter will be used by a competent person prior to the commencement and during any work to identify all services capable of being identified. The intention will be to bring up-to-date records of existing services and supplement these records where they are deficient. Services found will be clearly identified to avoid the risk of damage, and where necessary, we will hand dig around them to expose the services prior to full excavation. Hand digging will require the use of air picks to expose services, starting immediately under the hardcover. Record drawings will be red-lined to show the most up-to-date information, held available on site for consultation, and details will be communicated at inductions, toolbox talks, and in a careful briefing on site prior to excavation.
- If any service is exposed, it will be photographed and sketched with offsets notes to inform future re-visits.
- Backfill will be with self-compacting granular material to a level where compaction is acceptable and then in a suitable material, including selected as dug, which must be possible to excavate with the air pick in future: i.e. dense, cohesive material like clay must NOT be used. If suitable backfill material as described is not available, the excavation should not proceed.
- Warning tape will always be placed, and if the utility has not provided it, we will have rolls to use. Besides using marker tape provided for each service, another physical barrier will be placed on top of the sand. As agreed by management, half the width of the red debris net will be placed first before the backfill. If the physical protection specified is not in place, then the backfill will not be completed until the protection is in place.
- Great care will be taken to establish what is meant by "terminations" or "diversions", and any assertion that there are "no" services will be treated with caution.
- Techniques using ground penetrating radar will be considered where information is clearly deficient and services are congested.
- We will comply with the Permit to Dig system.
- Traffic management will set up traffic control through the entire route in stages to keep disruption to a minimum.
- The operatives will barrier the work area at all times to keep the general public safe.
- The trench to be excavated will be cat and genny to mark up all existing services, and all appropriate drawings will be read. If there is any doubt, a trial hole will be excavated by hand to confirm any existing services.
- The trench will be marked out in the footpath or verge so the tarmac or turf can be removed so the service trench can be excavated to allow the installation of the service main. All arising items are to be removed from the site by use of a forward tipping dumper for reuse or removal at a later date, as per the SWMP.
- Water mains, gas mains, and LV electricity cables will be laid by others into the trench at the correct depth and surrounded by sand or similar bedding material. Warning tape will be installed and pegged. We will then fill the remainder of the trench with 6F2 or similar and compact it layers to the underside of the new tarmac reinstatement.
- The trench will be reinstated to the HAUC spec. Once the services are laid, installation records will be taken, and the GPS positions of the services will be noted on the site drawing for the as-installed records.
- On completion of the works, the traffic management and site equipment will be removed, and the area will have any surplice materials and rubbish removed.

		Install services crossovers (Proposed) • Services positions are per combined services drawing and must be considered when placing the carriageway. All ducting under the carriageway must be to UKPN standards of 125mm. • 125ømm and 150ømm Ridgiduct Power HV class 1 duct complies fully with the electrical supply industry specification for cable protection - ENATS 12-24.

14.0	Method of work Construction Emergency site entrance	• Contract Manager and Site Supervisor to assess the works and identify the hazards and control measures that need to be put in place to avoid the exposure or to minimise the risk to a reasonably acceptable level. • They will be responsible for selecting the correct equipment for the task and the personnel trained to carry out the task. • A Task Activity Briefing must be held with the team carrying out the Task, and they must be briefed on the hazards identified, control measures that will be applied, plant and equipment used, work package plan, detailed drawing, and every member of the team must understand and sign the briefing sheet. • NRSWA-trained operative to carry out such works • Work must stop when the weather conditions or any other circumstances change. The risks must be assessed and control measures applied to mitigate these risks before work commences. **Refer to** **RA_12** Excavations / Trenches **RA_11** Operating 306° Excavators **RA_10** Operating Forward Tipping Dumpers **RA_33** Ride on Roller **RA_14** Hand Laying and Compacting Tarmac Surfaces. **RA_29** Tarmac Surfacing **RA_18** Laying Kerbs **RA_19** Laying Slabs **RA_06** Cutting Concrete**,** kerbs, blocks, edges, pipes. **RA_38** Pouring Concrete **Installing the Proprietary Trench support – Trench Box, Manhole Box, Trench Sheet Piled** **COSHH** – Wet Concrete / Mortar Silica Petrol **Preparation:** • The foreman will consult with the client and agree on the areas for the works to commence. • Signage and barriers will be erected to segregate the works area from other trades and members of the public (if applicable). • H & Co to commence the work starting with a detailed survey of the area for live cables and services using a **C**able **A**voidance **T**ool and hand excavation methods to ascertain the actual line and level of underground apparatus that could be encountered, mark and plot all live services encountered on a relevant drawing. **Emergency Site entrance** A Permit to Dig shall be obtained before works commence. The permit shall include the latest approved drawings, utility records and any applicable permits. All operatives shall be briefed on the scope of works and associated hazards. The work area shall be secured using Heras/chapter 8 fencing and appropriate exclusion zones established to prevent unauthorised access. Approved Traffic Management shall be installed in accordance with Chapter 8 of the Traffic Signs Manual before any work begins. Temporary traffic signals and priority signage shall be erected as shown on the approved Traffic Management Plan. All operatives involved in the excavation works shall be competent and trained to work in the vicinity of underground services. A CAT and Genny survey shall be undertaken to identify and mark all detectable underground services within the excavation area. A hand-dug trial hole shall be excavated to confirm the location and depth of existing underground services. This trial hole will also provide the starting point for vacuum excavation. A Vacuum Excavator (VacEx) shall be used to safely expose services , minimising the risk of damage to existing utilities. Where excavation is carried out in the vicinity of High Voltage (HV) electrical services, plant operators shall wear the appropriate Arc Flash PPE and

comply with the relevant safe system of work.
The proposed emergency entrance shall be set out in accordance with the approved engineering drawings and verified prior to excavation.
Existing carriageway, footway and kerbs shall be saw cut to the required extents before breaking out the existing construction.
Excavation shall be carried out to the required formation level as specified on the approved drawings and directed by the Engineer.
Excavated material suitable for reuse shall be stockpiled safely within the site boundary. Once excavation is complete, the formation shall be inspected and offered to the Client/Engineer for approval (Hold Point) before any construction layers are placed.
The formation shall be checked to confirm it is uniform, stable and compliant with the project specification. Any soft spots or unsuitable material shall be removed and replaced as instructed by the Engineer.
Construction of the pavement shall commence using the approved materials and layer thicknesses specified within the project drawings. Where required, capping thickness shall be determined by the approved CBR results if required .
Each construction layer shall be placed and compacted to the specified depth before the next layer is installed.
Kerbs, edging, channels and any associated highway features shall be installed in accordance with the approved drawings.
The carriageway and emergency entrance surfacing shall be completed using the specified pavement construction, including base, binder and surface course.
On completion of the works, all road markings and signs shall be installed where required.

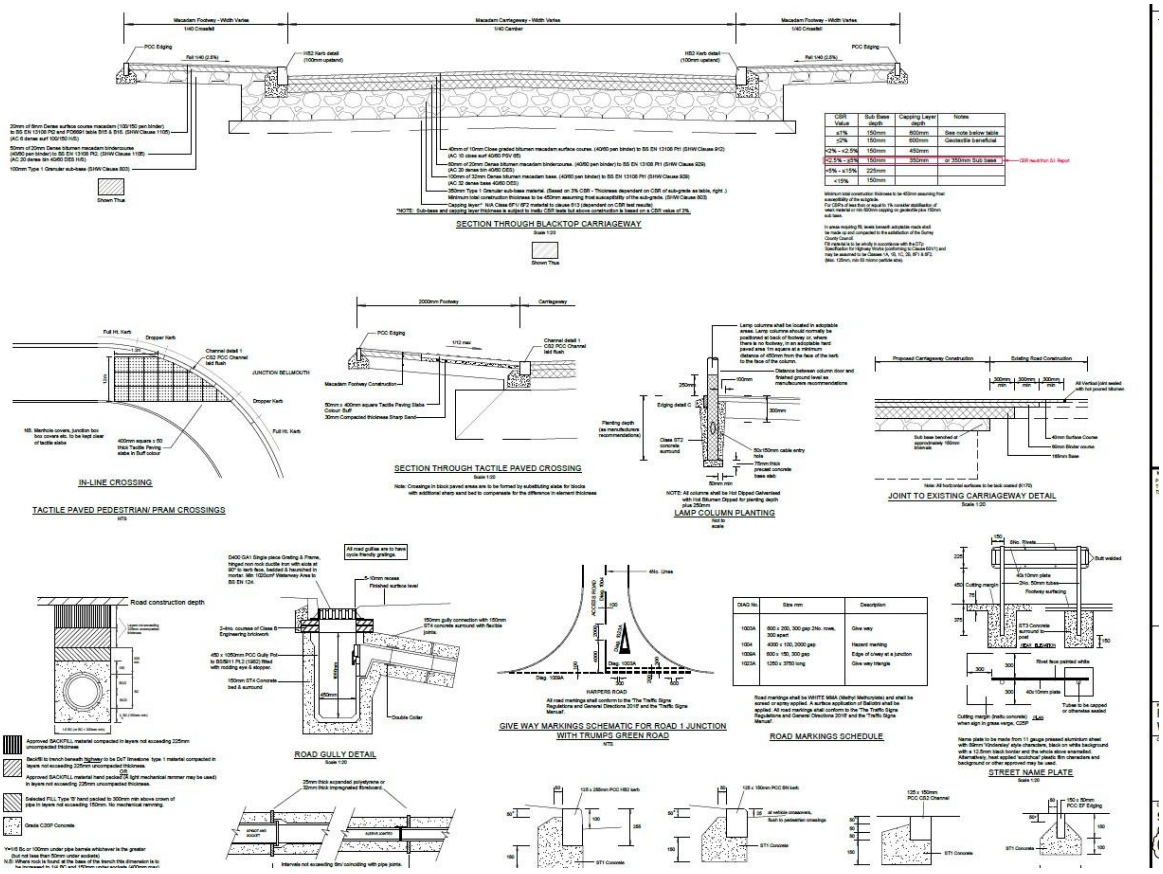

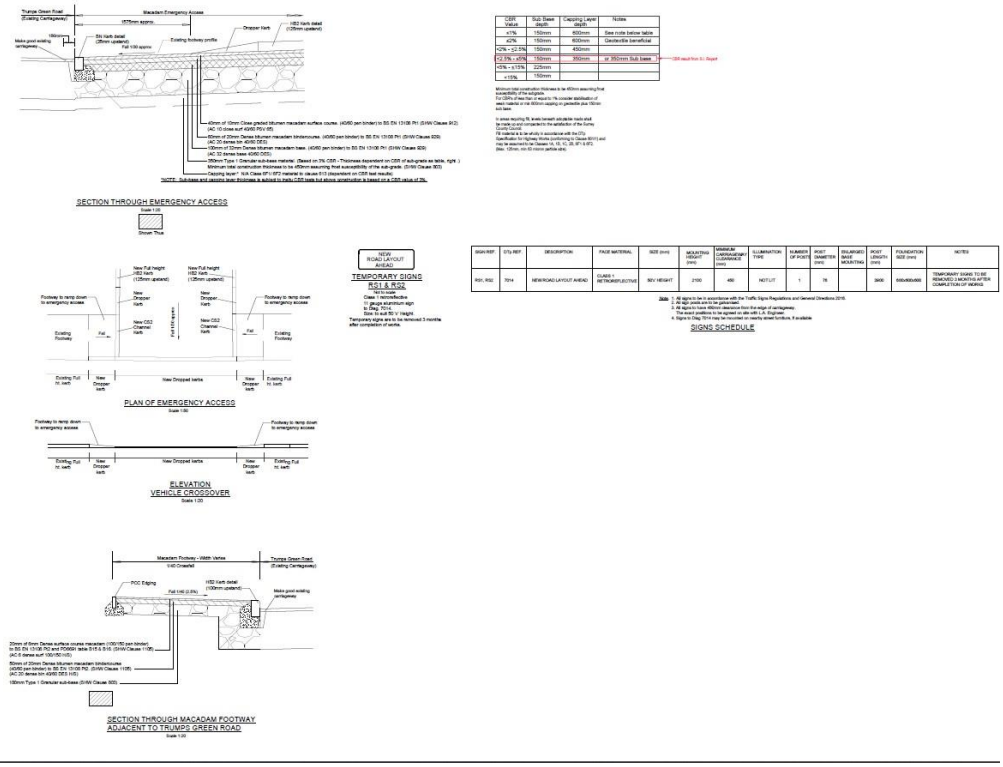

Kerb / Edging Installation – refer to drawing for details

- New kerb and edging lines will be set out using non-penetrating cantilevered 'pin-safe' with "top of kerb/ edging" levels marked.
- The excavator will then conduct the minor excavations to provide suitable depth for kerb /edging and concrete bedding.

There are two options relating to initial kerb installation:

Option 1 - Sacrificial full-height kerbs to retain the edge of the roads.

- Kerbs will be loaded out by the tracked excavator using lifting strops or, alternatively, forklift attachment, and each stack will be deposited at a suitable position along the kerb line.
- Kerbs will then be installed or deposited from the pallet using the Probst kerb laying dolly, as close to the proposed kerb line as possible.
- The excavator bucket will distribute the concrete to the line.
- Concrete will be manually levelled under the string lines and will be left approx. 20mm high to allow for bedding of the kerb.
- For Kerbs that aren't able to be finally placed by the Probst kerb dolly, two skilled groundworkers will use the 'bicycle handle type' kerb lifter and finally lift them into their proposed position

Note: under no circumstance should anybody use the 'bicycle type' handle lifter as their primary laying process; it should only be used where the Probst kerb dolly is limited in use. Once kerbs have been placed on the concrete bed and aligned/levelled, they will be levelled using a pick.

Option 2 – 7N concrete blocks used as templates.

- Blocks will be loaded out by the tracked excavator using lifting strops or, alternatively, forklift attachment, and each stack will be deposited at a suitable position along the curb line.
- The excavator bucket will distribute the concrete to the line.
- Concrete will be manually levelled under the string lines and will be left approx. 20mm high to allow for bedding of the kerb.
- Blocks will then be manually placed following the engineer's pins and string line.
- Bedding and hunching concrete will be delivered to the site ready mixed and will be deposited in a stockpile.
- Following kerb/ block installation, all iron works must be raised to base course level to avoid subsequent damage or residual trip hazards.
- Carry out final preparation to sub-base using the excavator and Bomag roller.
- Base course tarmac will either be installed by us or a specialist contractor, depending on road features and quantity. The base course tarmac, if installed by us, will typically be levelled off by a 360 excavator and rolled in accordance with the relevant specification.

Note: Edgings will be installed using a method similar to installing concrete 7N blocks.

		Block Paving • A layer of 50 mm 6.3-2mm grit will be laid out over the intended paved area and levelled using timber and steel guide rails to the required level. • The grit will be compacted using the vibrating plate. • The block paving will be delivered to the immediate area mechanically, and then, using a paving barrow, it will be transported to the paving operative/s. • The pavers will be laid by hand to the agreed pattern. • Once the area has been paved, it will be settled in using a vibrating plate. • Any cutting will be carried out using a Block Cutter. **Raise Ironworks.** Enclose the work area with half height barriers. Ch 8 signage will be used to direct other on-site trades away from the area of works and the access and egress routes to the area of work. Using a Petrol Saw with a water suppression pressurised pump, the retaining material will be scored, broken, and transported to a stockpile for reuse or removal. The engineer will give the finished road level and camber, and operatives will lay the ironworks at these levels. Engineering brick will be laid on a bed of mortar, a minimum of 2 courses and not more than 4 courses. The cover will be laid to line and level and surrounded by concrete to the underside of the tarmac level. The concrete will be allowed to cure, and tarmac will be called to the site, laid, levelled and compacted. 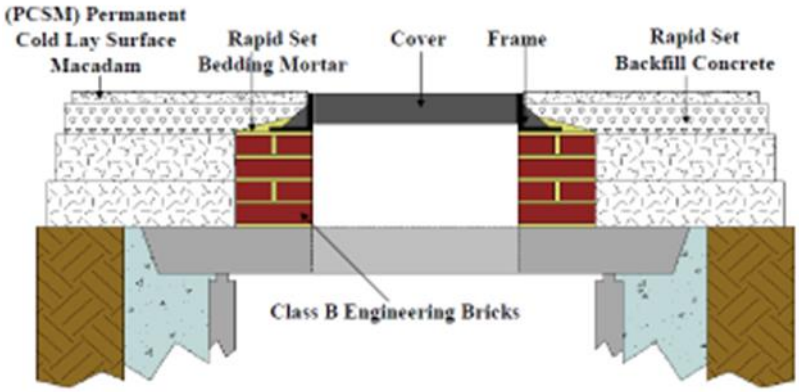 **Tarmac Works – Refer to drawing for details** • 350mm type one granular sub base material • 100mm of 32mm dense bitumen macadam base • 60mm of 20mm dense bitumen binder course • 40mm of 10mm close graded bitumen surface course • An appointed specialist contractor will then undertake the required tarmac resurfacing works.

15.0	Method of work Works on/near Underground Services	• Contract Manager and Site Supervisor to assess the works and identify the hazards and control measures that need to be put in place to avoid the exposure or to minimise the risk to a reasonably acceptable level. • They will be responsible for selecting the correct equipment for the task and the personnel trained to carry out the task. • A Task Activity Briefing must be held with the team carrying out the Task, and they must be briefed on the hazards identified, control measures that will be applied, plant and equipment used, work package plan, detailed drawing, and every member of the team must understand and sign the briefing sheet. • Work must stop when the weather conditions or any other circumstances change. The risks must be assessed and control measures applied to mitigate these risks before work commences. **Refer to** **RA_26** Work Near Underground Services **RA_12** Excavations / Trenches **RA_11** Operating 306° Excavators **RA_10** Operating Forward Tipping Dumpers

		• Pre-tender information and Construction Phase Plan will be used and considered in light of additional information from utilities' plan drawings, section drawings from utility companies recording depth of services and commissioned ground probing radar surveys as necessary. • Any on-site service disconnections should be confirmed by the Client prior to the commencement of construction. • The assumption that live working can be avoided as the default position is set out above, and a full justification of any live working must be set out before this is considered. A method statement for live working will be required as live working is not considered to be properly controlled by any permit-to-work system. HSG47, rev. Feb.2014, states, "Where new services such as electrical or gas supplies are being installed, it may be possible to reduce risks by not installing or commissioning them until other groundworks and work on the installation have been completed. This should be considered early in the design process to allow the works to be sequenced accordingly." • Permit to Dig will be completed prior to excavating on/near underground services, and this will be accompanied by existing and as-built service drawings. • Team working on/near underground services will be trained on "Digging on/ near Underground Services" Houlihan's Procedures. It will be briefed on the task, provided with existing and/or as-built drawings, and will sign a Permit to Dig before starting any work. NO MECHANICAL DIGGING WITHIN 500MM OF A KNOWN SERVICE. General site RAMS to be read in conjunction with Houlihans' working on or near live services" procedures. • A cable avoidance tool in conjunction with a transmitter will be used by a competent person prior to the commencement and during any work to identify all services and ducts. The intention will be to bring up-to-date records of existing services and supplement these records where they are deficient. Services found will be clearly identified to avoid the risk of damage, and where necessary, we will hand dig around them to expose the services prior to full excavation. Hand digging will require the use of air picks to expose services, starting immediately under the hardcover. Record drawings will be red-lined to show the most up-to-date information, held available on site for consultation, and details will be communicated at inductions, toolbox talks, and in a careful briefing on site prior to excavation. • As each service is exposed, it will be photographed and sketched with offset notes to inform future re-visits. • Backfill will be with self-compacting granular material to a level where compaction is acceptable and then in a suitable material, including selected as dug, which must be possible to excavate with the air pick in future: i.e. dense, cohesive material like clay must NOT be used. If suitable backfill material is unavailable, the excavation should not proceed. • Warning tape will always be placed on top of the sand backfill, and if it has not been provided by the utility, we will have rolls to use. If physical protection is specified, then the backfill will not be completed until the protection is in place. A 1-tonne bag of sand will be placed at each planned service connection. Red debris netting will be placed over the sand backfill as an additional warning. • Great care will be taken to establish what is meant by "terminations" or "diversions", and any assertion that there are "no" services will be treated with caution. • Techniques using ground penetrating radar will be considered where information is clearly deficient and services are congested. • We will comply with the Principal Contractor's Permit to Dig the system. We will additionally follow HSE advice that a permit-to-work system cannot adequately control works on or near live services. We will provide a full method statement for the work and brief it to our competent team.

16.0	Method of work Spoil Heaps	• Contract Manager and Site Supervisor to assess the works and identify the hazards and control measures that need to be put in place to avoid the exposure or to minimise the risk to a reasonably acceptable level. • They will be responsible for selecting the correct equipment for the task and the personnel trained to carry out the task. • A Task Activity Briefing must be held with the team carrying out the Task, and they must be briefed on the hazards identified, control measures that will be applied, plant and equipment used, work package plan, detailed drawing, and every member of the team must understand and sign the briefing sheet. • Work must stop when the weather conditions or any other circumstances change. The risks must be assessed and control measures applied to mitigate these risks before work commences. **Refer to** **RA_11** Operating 306° Excavators **RA_10** Operating Forward Tipping Dumpers **Installing the Spoil to the TW design** There will be a need to stockpile different categories of material separately, whether they eventually go to landfills or can be recycled or reused. • Stockpiles will be constructed by the dumper tipping material at ground level for an excavator to place as a graded pile. The excavator must grade off the sides to a compacted batter, throw off rainwater, and dress the top. • Dumpers must not tip on uneven ground: all tipping operations must be undertaken on level firm ground. • The sides and end of the spoil heap must be bunded (at least 1.0m(H)1.0m(W)) • The stockpile will be monitored for slippage and damped down if any dust becomes airborne. • The angle of repose will be estimated for different materials, with 45° an accepted average unless there is evidence of slippage. • Stockpiles of topsoil will be no higher than 2.0m as this would prevent aerobic action in the heap and render the topsoil sterile. • Notify the H&S department to arrange an inspection within 24 hours of the former spoil heap. • We will include spoil heaps in our temporary works register, but the detailed construction of the spoil heap will be determined from the material it consists of. Note: any characterisation of material site won is an approximation or average, and a 45° batter has been a proven average,

approximate solution. There is no way of completely removing uncertainty from creating spoil heaps, but the experience of our site supervisors practically succeeds. We will provide details in our temporary works register, with risk and category, before creating a stockpile

- If there is a need to place contaminated material in a spoil heap, awaiting the results of tests or grading, for example, it will be placed on thick polythene on hard standing while it remains available. The heap will be graded, sealed and polythene placed over and weighted down.
- The Company procedure for forming stockpiles will accompany this MS.

Standard details below:

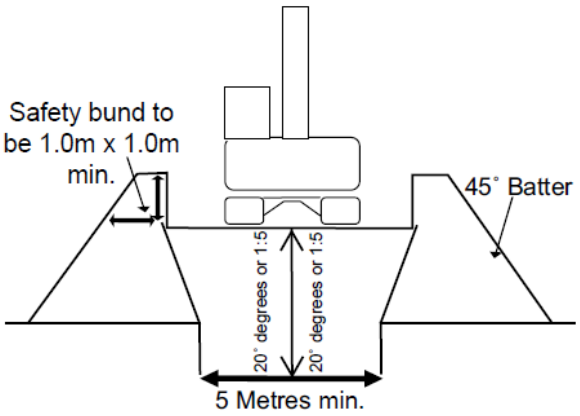

Spoil Heap Removal

- A single excavator will be used for the spoil heap removal.
- The excavator will remove spoil from the heap, dragging it down from higher levels to the loading area.
- The excavator will work from a platform cut into the spoil heap, as depicted in the sketch below.

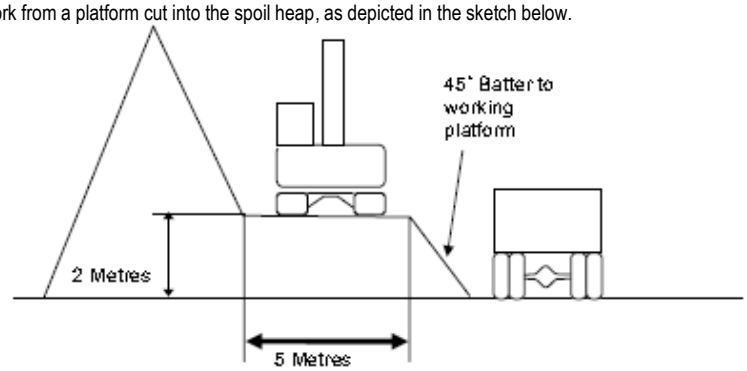

- The working platform must be cut from the spoil heap above and compacted down with the back of the bucket to form a secure and stable working area.
- The platform must not be higher than two metres and must be a minimum of 5 metres wide.
- The machine must not work closer than a metre from the edge of the platform.
- The front of the platform must be battered back at a 45-degree angle at all times.
- The working platform must extend the length of the spoil heap face that is being cut away with an access ramp onto the platform at both ends.
- When tracking the excavator, the operator must always face the direction of travel. When slewing around to face the direction of travel, he must be mindful of any lorries near his position.
- The loading area will be a restricted area, with no pedestrians allowed into this area. All drivers are to stay in their vehicles at all times while waiting to be loaded.
- While loading the vehicles, the excavator will face the vehicles with the tracks pointing towards them. This will increase the stability and the driver will have better visibility while loading the vehicles.

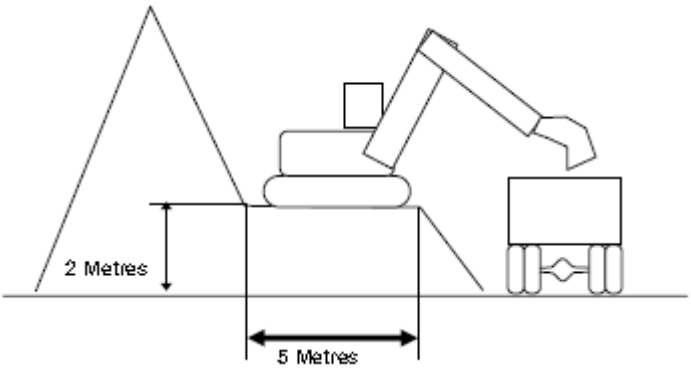

		• This process will continue until the spoil heaps are removed to existing ground levels. • The machine driver will monitor and supervise all vehicular movements. He will signal when the next lorry is to come forward into the loading area. The loading area is large enough for the lorries to turn and reverse into position if necessary. • There are no areas with a restricted view, and as only one lorry will be reversing at a time, a banksman is not required at this point. • Where required and as necessary, continual watering down procedures will be maintained throughout the progress of the work contributing to the suppression of dust migration.

17.0 Method of work

Lifting with excavators

All lifting operations on site should be planned to ensure that they can be carried out safely and that all foreseeable risks have been taken into account.

Poor planning is one of the major causes of accidents arising from using excavators for lifting operations.

LOLER requires that the siting, setting up, and use of an excavator for lifting operations are carefully planned to carry out these activities safely and efficiently. The responsibility for planning lifting operations lies with the employer who is undertaking the task. The employer should ensure that they identify one person with sufficient training, practical and theoretical knowledge, and experience who should be appointed to be responsible for planning and supervising the tasks. This person is known as the "Appointed Person" to BS 7121. – Alban Shehu 07584809221.

To enable lifts to be planned, supervised and carried out effectively, three categories of lifts are detailed below. The category into which a particular lift will fall depends on assessing the hazards associated with the environment in which the lift is to be carried out and those associated with the load and lifting equipment. As can be seen from the table below, increases in either or both environmental or load complexity (the "Complexity Index") will lead to the lift being allocated a higher category. Having identified the hazards associated with a particular lift, a hierarchy of control measures should be applied to eliminate or control those hazards.

Lift categories (Basic / Intermediate / Complex).

Environmental complexity (E)	Load complexity (L) 1	2	3
3	Complex	Complex	Complex
2	Intermediate	Intermediate	Complex
1	Basic	Intermediate	Complex

Complexity variables and constants	Lift category		
	Basic	Intermediate	Complex
Increasing environmental complexity	The excavator operator has clear sight of the load path and the load is to be placed on the ground.	The load is to be placed over an obstruction such that the excavator operator might not have clear sight of the landing area from the control position.	The load is to be placed in a trench behind a bund, without line of sight, and with proximity hazards, such as scaffolding or overhead power lines.
Constant low load complexity	A load of known weight with designated top lifting points and central centre of gravity. The load does not contain fluids, is not fragile and is inherently stable when landed.	A load of known weight with designated top lifting points and central centre of gravity. The load does not contain fluids, is not fragile and is inherently stable when landed.	A load of known weight with designated top lifting points and central centre of gravity. The load does not contain fluids, is not fragile and is inherently stable when landed.
	Complexity Index E1:L1	Complexity Index E2:L1	Complexity Index E3:L1
Increasing load complexity	A load of known weight with designated top lifting points and central centre of gravity. The load does not contain fluids, is not fragile and is inherently stable when landed.	A load of estimated weight with an estimated centre of gravity and without designated lifting points. The load does not contain fluids, is not fragile and is inherently stable when landed.	A load of estimated weight and centre of gravity and without designated lifting points. The load contains fluids, is fragile and is not stable when landed.
Constant low environmental capacity	The excavator operator has clear sight of the load path and the load is lifted to and from the ground	The excavator operator has clear sight of the load path and the load is lifted to and from the ground	The excavator operator has clear sight of the load path and the load is lifted to and from the ground
	Complexity Index E1:L1	Complexity Index E1:L2	Complexity Index E1:L3

** Only basic lifts can be undertaken in absence of a formal lift plan produced by the Company's appointed person, providing the criteria below is met.*

Planning, Supervisory and Operating Personnel

The Lifting Team

All lifting operations should be carried out by the lifting team. The team will consist of persons carrying out the following roles:

- Appointed Person
- Lift Supervisor
- Excavator operator
- Slinger/Signaller

The complexity and size of the job will determine the exact team structure but all roles must be allocated and the duties discharged.

Roles and Responsibilities

Appointed Person

- Planning the lifting operation for Intermediate & complex tasks; selection of the lifting equipment and lifting accessories; instruction and supervision; and consultation with other responsible bodies to ensure effective collaboration as is necessary for the work to be undertaken safely.
- Ensuring that the planning process outcomes are recorded in a lift plan.
- Ensuring that adequate pre-operational checks, intermediate inspections, maintenance and thorough examination of the equipment have been carried out.
- Ensuring that there is an effective procedure for reporting defects and incidents and for taking any necessary corrective action.
- Taking responsibility for the organisation and control of the lifting operation.
- Ensuring that the Lift Supervisor and other lifting team members are competent to carry out their roles and are fully briefed on the lift plan's contents, scope and limits.
- Be familiar with the relevant parts of the project's health and safety plan, where the lifting operation is being carried out on a site where the Construction (Design and Management) Regulations 2015 apply.
- Liaising effectively with the site temporary works coordinator regarding relevant issues such as ground stability.

NOTE: The Appointed Person should have the required understanding and experience in planning lifting operations with excavators.

Lift Supervisor

- All lifting operations should be supervised by a Lift Supervisor. For basic lifts, this role may be combined with that of a slinger signaller, whilst for

		more complex lifts, a separate person will be required. NOTE: The degree of supervision required will depend on the category of lift and the outcomes of the risk assessment • The Lift Supervisor should direct and supervise the lifting operation, ensuring that it is carried out in accordance with the lift plan. The Lift Supervisor should be competent, suitably trained, and have sufficient experience to carry out all relevant duties. NOTE: Competence requirements for self-supervision might differ from those for supervising others. • The Lift Supervisor should also have sufficient authority to stop the lifting operation if they consider it dangerous to proceed. NOTE: The Appointed Person may decide to undertake the Lift Supervisor's duties or delegate these to another person with appropriate expertise for the lifting operation. <u>Excavator Operator</u> • The excavator operator should be responsible for the correct operation of the excavator in accordance with the manufacturer's instructions and within the safe system of work, as detailed in the lift plan. • The excavator operator should respond only to the signals from the slinger/ signaller, who should be clearly identified. • The excavator operator should: • Have the necessary competence (skills, knowledge and experience) to carry out lifting operations. • Be familiar with the excavator to be operated. Check that it is in good condition and that it has sufficient capacity to carry out the lift safely. • Ensure that they do not wear loose clothing, which could snag on the controls and lead to unintended movement. • Ensure, before the lifting operation starts, that the bucket is removed from the machine if the lifting attachment (hook) is fitted to the quick hitch or dipper end. • Ensure that lifting operations are only carried out with the excavator in lifting mode and that the overload warning device or rated capacity indicator/limiter is selected. • Ensure that they have been briefed on and understand the lift plan (for Intermediate & Complex lifts). • Identify the other members of the lifting team and ensure that they are clear of the excavator's arc before operating the machine. • Check that the area where the excavator is to be positioned for the lifting operation is suitable for the task, the landing area is suitable to take the load, the area is segregated from the rest of the site and that only those personnel directly involved in the lift are within the segregated area. • Ensure that the pre-use checks of the lifting accessories to be used have been carried out and that the lifting accessories have been correctly attached to the excavator's lifting attachment. • Ensure that the excavator's control isolator (dead man) is selected when the lifting accessories and load are being attached to avoid unintended movement. • Only follow signals from the designated slinger-signaller during the lifting operation, using the pre-arranged system of signals. NOTE: It is essential that the excavator operator responds immediately to an emergency stop signal from any person. <u>Slinger-signaller</u> The slinger-signaller should be properly trained in all aspects of slinging loads and signalling and be authorised by the Appointed Person – for intermediate and complex tasks. The slinger-signaller should be responsible for: • Carrying out pre-use and post-use checks of lifting accessories. • Attaching and detaching the load to and from the excavator load-lifting attachment. • Using the correct lifting accessories and other equipment in accordance with the lift plan (for intermediate & complex tasks); • Initiating and directing the safe movement of the excavator using a pre-arranged system of signals. If there is more than one slinger-signaller, only one of them should have this responsibility at any one time, depending on their position relative to the excavator. • Guiding movements of the excavator during pick and carry lifting operations. • Ensuring that they are readily identifiable as the designated Slinger/Signaller by the excavator operator. • Movement of the excavator includes pick and carry duties. All pick and carry duties will be continuously controlled by a banksman. NOTE: Where continuity of signalling is required and this slinger-signaller is not visible to the excavator operator, another slinger-signaller or signaller will be necessary to relay signals to the excavator operator. Alternatively, other audio or visual methods may be used. A typical example of audio methods used is where a Slinger/Signaller using a radio continuously instructs the operator to lower a load, e.g. by saying "Lower…lower…lower...", and failure of this continuous instruction from the slinger-signaller indicates that the operator needs to halt all excavator movements. Lift plans will be in the excavator cabs.

<u>18.0</u>	Health & Safety	• All operators and personnel shall be trained and certified in the functions and role suitable to their responsibility on the site. • Approved method statements are to be used together with site rules and restrictions to inform and advise the workforce of the manner in which the operations will be conducted. • PPE appropriate to the scheme will be issued on commencement and the operatives and site management are to ensure the correct and continued use of such whilst on site. • All items of plant, access and lifting equipment are to have been inspected prior to delivery and be accompanied by the required documentation. Site checks will be performed to the manufacturer's / supplier's recommendations. • Where appropriate, Operatives will be trained for Confined Space Work. • Works contained in or about live sewers are to be tested for the presence of gas and are to employ additional PPE of gauntlets, enclosure suits / overalls, breathing equipment and tripod / harness / winch. Gas monitoring equipment is to be used throughout such operations. • If it is not possible to Step or batter the Excavations Earthwork support is to be used in all excavations over 1.2m deep and at any other time as is deemed necessary. • Manual handling to be kept to a minimum, with nothing larger than 25 Kg without a suitable risk assessment. • Banksmen are to attend all machine excavations, lifting operations, especially all pick and carry duties, and direct site traffic as required.

- Eye and ear protection is required when using powered tools.
- All users of abrasive wheels must be abrasive wheel awareness trained & face-fit tested.
- Site dump trucks etc. are to be fitted with ROPS, seat belts & reversing warning indicators.
- Existing site services are to be identified located [using scanners] and protected throughout the works and shall only be exposed by means of hand excavations to determine depths etc.
- Main traffic routes are to be established for bulk removal or transportation of materials.
- Small tools will be kept in the storage container when not in use. Plant is to be left in-situ on site but will be secured and immobilised. All small drum oils to be kept in COSHH store.

Welfare Arrangements

The contract manager and site foreman will check and make arrangements for the use of adequate welfare facilities by all operatives as laid down in the Construction (Design and Management) Regulations 2015.
The Contract Manager will ensure sufficient provision for the canteen, drying/changing room, offices, and toilets.
There is no TBS on site. The generator will supply power. Water will be using a metered standpipe that has been installed and approved on-site. South-eastern

Personal Protective Equipment

- Basic PPE for our groundworkers has been assessed to be boots, hi-vis jackets, and helmets at all times. Gloves, helmet-mounted ear defenders, wellington boots, and eye protection are available on-site depending on the task at hand.
- Safety helmets EN 397
- High visibility vest/jacket EN 471 Class 2
- Safety Gloves EN 388 and see full glove selection policy
- Hearing protection EN 352-1/EN 352-2 is mandatory when using breakers or working in areas where noise levels rise above 85 dB(A).
- Safety glasses to EN 166-F when placing concrete.
- Safety goggles to EN 166 B when cutting concrete products or steel products.
- Safety boots to EN 345: S1-P
- Suitable footwear when standing in concrete wellingtons to EN 345 S4
- Face shield when using air pick
- Vibration procedure attached, which includes assessment nomograms for all handheld vibration-emitting plant
- Noise assessments are attached for all noise-emitting plant.
- More specialised equipment for confined spaces, asbestos, and contaminated land will be issued as required by risk assessments from time to time and signed for in a Construction Confederation register compliant with the Construction (Design and Management) Regulations 2015.
- PPE must still be worn in hot weather: Breaks from work and drinking water are essential, but where risk assessments show the need for PPE, it must be worn or work halted.
- Sunblock is available on all sites.
- Sunglasses will be issued on sites where glare is a problem and on all sites where there is chalk.
- Personal protective equipment is provided free of charge to our employees and will be replaced when required.

Bucket changing areas

- Suitable fencing & signage will be erected in close proximity to excavator working areas where buckets will require changing. The designated areas will move to minimise transit but will remain of the same standard even for short duration work.
- The smallest changing area must consist of 3 Heras fencing panels and a half-height barrier along the face so all four sides are enclosed; the requirement for the half-height barrier is to prevent 10t & below excavators from damaging any hydraulic hoses on the underside the boom or the fencing panel.
- NOTE: all our quick hitches are fully automatic.

Noise Monitoring

The following working practices will be employed to reduce noise throughout construction activity on site:

- Where practicable, position the plant away from site boundaries, particularly on sites with neighbours within close vicinity.
- Make use of stockpiles as noise shields
- Arrange delivery times on site to suit the area.
- Use all silencing equipment available and keep panels closed on all generators and compressors.
- Switch off noisy equipment when not needed.
- Arrange traffic routes for mobile plant so the amount of reversing required is minimised, reducing the use of reverse warning bleepers.
- If there is doubt as to noise levels or complaints, we will deploy a Class 1 noise level meter for operations. Environmental noise measurement has been done by a specialist. There is no Sec.60/61 in place.
- Observe restrictions on working hours: No plant operating before 8:00 am

Dust Monitoring

- Routine visual monitoring will be undertaken for dust at all operational areas at the site. In the event that significant visual dust is observed at the boundaries of the operational areas, action will be taken to suppress the dust. We won't wait for the dust but will also respond if it is seen in between regular preventive road cleaning and dust suppression by water from a bowser. The most useful stipulation, if we have bulk shifting of waste overhaul roads, is that the exhausts vent upwards and not down at the road. If haul roads were tarmacked, this would massively reduce the problem.

This action would comprise the application of water to waste stockpiles, roads, and waste treatment activities as appropriate. Inspections will be carried out by site operatives throughout the day and by the Site Manager on a daily basis.

Refuelling Area

- The fuel tank will be double-skinned bunded (110% of capacity) and placed in the designated refuelling area. The refuelling area will be Heras Fenced, marked out with visible signage, and the fuel tank will be positioned upon 150mm/ type 1 sitting on a sheet of Tarpaulin. During the

fuelling process, a drip tray will be positioned under the connection point to ensure that any drips of diesel are caught in the tray; the same process applies to filling petrol tools/cans, etc. If the hose has been contained within the secondary bund and submersed in diesel, the hose itself must be located within the drip tray; take the lid off if necessary. A spill kit and nappy sacks will be there for any emergency.

- A fire point with 2no. CO2 extinguishers will be placed close to the refuelling area and appropriately signed.

Storage of tools & materials

- Small tools will be kept in the storage container when not in use. The plant is to be left in situ on site but will be secured and immobilised. All small drum oils are to be kept in the CoSHH store.
- Materials that are on pallets will not be stacked more than two pallets high.
- Lightweight materials such as cell core, corded, and polystyrene panels used for floors will be weighted down.

Interface with other trades

- Coordinating work with other trades.
- From the arrival of other trades on site, work will be coordinated by our Site foreman.
- Our work will be segregated from other trades.
- Excavations will be guarded to prevent unauthorised access. We will not undermine scaffolding at later stages of the job and will not work underneath scaffolding. Our machinery has flashing hazard lights, and all reversing will be kept to a minimum.
- Note that flashing lights interfere with laser levels. Manufacturers have found no way around this problem. And so lights should be switched off when the laser level is in use, but only in the area our site engineer defines as where interference could occur. This is not a blanket excuse for the whole site.

Housekeeping

- Materials will only be stored in designated areas. Work areas will be cleared of waste as soon as practical, including materials surplus to a task. If this does not happen in a timely fashion, the working area will become constricted and separation will become difficult. If we leave behind waste or surplus materials, this makes distancing difficult for others. We should require this of other trades before we enter a new work area.
- Any waste materials to be disposed of in the appropriate skip.
- Waste from disposal bins around the site, including in offices, must be removed on a regular basis during the day.
- Clear access at all times must be maintained should the emergency services be required.

Reporting of Accidents

- Any accidents whatsoever arising out of or in connection with the site works on or off the Site which cause personal injury or property damage shall be reported to the OHSEQ department immediately, in writing, giving full details and statements of witnesses. In the event of a reportable accident, the Health & Safety Executive shall be informed, and an F2508 will be submitted.
- All accidents to be recorded in the Accident Book and reported to the Client.
- All near misses will be reported to the Client.
- If CPR is required, then the following guidelines have been extracted from the latest Resuscitation Council UK Statement on COVID-19 in relation to CPR and resuscitation:
- Because of the heightened awareness of the possibility that the victim may have COVID-19, Resuscitation Council UK offers this advice:
- Recognise cardiac arrest by looking for the absence of signs of life and the absence of normal breathing. Do not listen or feel for breathing by placing your ear and cheek close to the patient's mouth. If you are in any doubt about confirming cardiac arrest, the default position is to start chest compressions until help arrives.
- Make sure an ambulance is on its way. If COVID-19 is suspected, tell them when you call 999.
- If there is a perceived risk of infection, rescuers should place a cloth/towel over the victim's mouth and nose and attempt compression-only CPR and early defibrillation until the ambulance (or advanced care team) arrives. Put hands together in the middle of the chest and push hard and fast.
- Early use of a defibrillator significantly increases the person's chances of survival and does not increase the risk of infection.
- If the rescuer has access to personal protective equipment (PPE) (e.g. face mask, disposable gloves, eye protection), these should be worn.
- After performing compression-only CPR, all rescuers should wash their hands thoroughly with soap and water; alcohol-based hand gel is a convenient alternative. They should also seek advice from the NHS 111 coronavirus advice service or medical adviser.

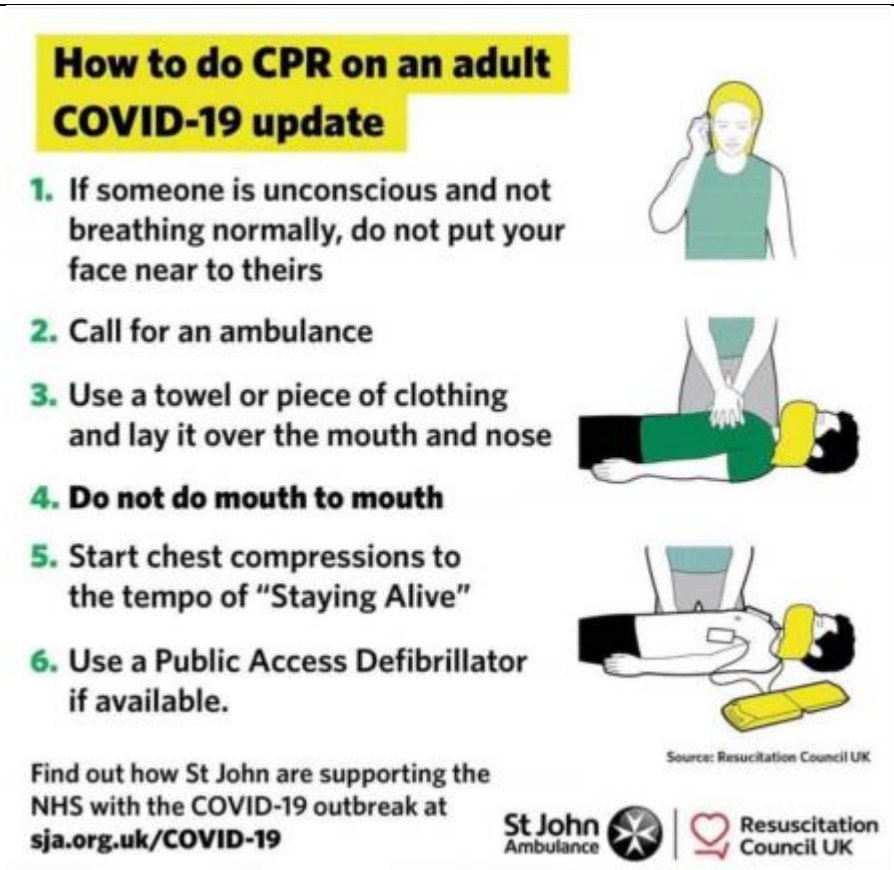

- Any accidents whatsoever arising out of or in connection with the site works on or off the Site which cause personal injury or property damage shall be reported to the OHSEQ department immediately, in writing, giving full details and statements of witnesses. In a reportable accident, the Health & Safety Executive shall be informed, and an F2508 will be submitted.
- All accidents are to be recorded in the Accident Book and reported to the Client.
- All near misses will be reported to the Client /Principal Contractor.
- Trained First Aider Hasan Koldashi will be responsible for all on-site treatment to operatives.
- First Aid equipment and facilities shall be available in the Houlihan & Co site office

H&Co First Aider will make entries in the Accident Book if the IP does not want to and agrees to the entry.

19.0 Discovery Strategy

Contamination

It remains possible that unexpected soil conditions may be encountered during the process of construction.
Examples may include oily pockets within the soil, pockets of cement boarding or fibrous materials within the soil, black ashy materials, soils exhibiting strong odours, brightly coloured materials and former structures or brickwork. Should previously undiscovered contamination be encountered during construction, this should be reported to the Site Manager immediately in order that any necessary inspection may be made. A watching brief approach is to be adopted during the various phases of the site's development such that in the event of suspicious conditions or materials being encountered, the Environmental Consultant can attend the site to inspect the 'discovery'. Records should be kept, and samples should be submitted for analysis where conditions encountered are not as anticipated. The results of any such testing should be sent to the Local Authority for consultation.
Depending on the type, nature and extent of any such 'discovery', it may be necessary to halt works in that location until such time as the assessment has been completed. This should be reviewed on a 'discovery' specific basis and in conjunction with regulatory consultation.
As a general guide, where such unexpected conditions are encountered the following approach is recommended:

- All discoveries are to be reported to the Site Manager immediately and works at that location are to halt until further notice;
- The area should be cordoned off using an appropriate barrier system.
- The Site Manager is to report any such discoveries to the Client and the Environmental Consultant: - RSK
- Following notification from the Site Manager, the Environmental Consultant shall discuss the discovery with the Local Authority and if considered necessary, arrange to meet an Officer on site to view the discovery;
- The Environmental Consultant shall attend the site to record the location, extent and nature of the discovery and implement an appropriate sampling and analysis regime, taking due account of the type and nature of the discovery, known and probable land uses in that area of the site.
- Where remedial action is required, regulatory consultation and approval will be sought;
- A record will be produced by the Environmental Consultant and held on site (with copies held by the Environmental Consultant, Client and Local Authority), detailing the discovery, assessment works undertaken, findings thereof, confirmation either of no action required or detailing the remedial action taken and validation thereof.

The process is shown below.

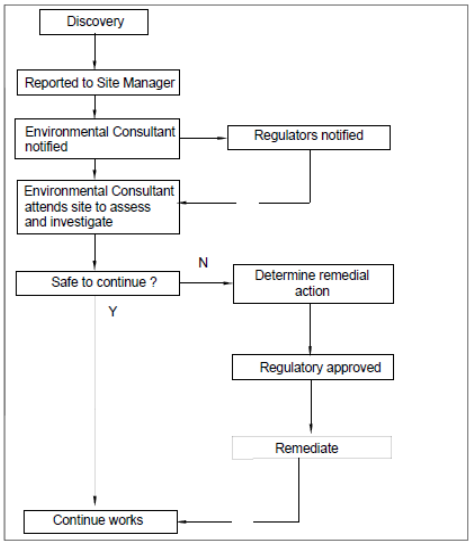

Waste Disposal

Duty of Care

As the persons undertaking construction work and specifying a particular waste disposal carrier and receiver, Houlihan & Co. have a duty of care under the Environmental Protection Act 1990. We must and will take all reasonable measures:

- To prevent any contravention by another person of the legal requirements associated with depositing, treating or keeping of controlled waste or its transport.
- To prevent the escape of waste from our control or that of any other person.
  On the transfer of waste, ensure that the transfer is only to an authorised person and that there is a written description of the controlled waste, which will enable other persons to understand clearly the nature of the waste and comply with the duty to prevent its escape.

(An authorised person is a waste collection authority or the holder of a waste management licence.)

Keeping Waste Safely

To comply with our duty of care, we must ensure that the waste is not affected by:

- Corrosion or wear of waste containers.
- Accidental spillage or leakage.
- Accidents or weather breaking contain waste open and allow it to escape.
- Waste blowing away or falling whilst stored or transported.
- Scavenging of waste by vandals, thieves, children, trespassers or animals.

The site perimeter will be secured and signed.
Stockpile areas will be clearly delineated and set on an impervious membrane.
Dust will be controlled by damping down or covering.

Transferring Waste

Waste can only be transferred to an authorised person. The Waste (England and Wales) Regulations 2011 detail the transfer note arrangements. The note must be completed by a responsible person from the company producing the waste, not by the carrier. The responsible person will consider whether the waste will require a special container to prevent its escape (e.g. a closed skip for asbestos) or if the waste can be mixed safely with other waste.
Part of the duty of care obligation is that checks are carried out before waste is transferred. Tip licences in particular must be carefully checked to ensure that the tip can receive the type of material being sent. Carriers' original registration certificates, not photocopies, must be carefully inspected.
A Waste Transfer Note (WTN) must be completed and signed by both the person handing over the waste and the person receiving it. It must contain enough information about the waste for it to be handled safely and either recovered or disposed of legally.
The WTN must include:

- a description of the waste
- any processes the waste has been through
- how the waste is contained or packaged
- the quantity of the waste
- the place, date and time of transfer
- the name and address of both parties
- details of the permit, licence or exemption of the person receiving the waste
- the appropriate European Waste Catalogue (EWC) code for the waste
- a declaration that you have applied the waste management hierarchy has been applied
- the 2007 Standard Industrial Classification (SIC) code of the person transferring the waste
- the producer is most able to describe their waste accurately. It is not acceptable to use non-specific terms such as 'general waste'.

		• separate paperwork must be completed for hazardous waste.
20.0	Silt Management & Dewatering	**Measures on Enabling Phase and Preparatory Earthworks.** • Stripping topsoil must be done in stages to maintain as much vegetation cover across the site as possible. • Retention of vegetation as far as reasonably practicable along south-western boundaries to promote infiltration of any surface water and silt run-off. • Haul road preferably be topped with tarmac, easy to clean with a road sweeper. • Jet wash and cattle grid will be installed at the exit of the site to clean the wheels of any vehicle leaving the site. • The designated car park will be topped with stone and be maintained mud-free. **Additional Measures During Construction Phase** • The placement of gulley protection (specially designed gulley guards or standard protection - straw and terram) in all gullies during construction, which are to be inspected and replaced/cleaned when necessary. • Minimising the movement of plant on and off roads to prevent the tracking of excess soil onto roads and highways. • The installation of hardstanding areas to the front of all plots to enable 'clean' forklift access. • The placement of hardstanding or topsoil at the earliest opportunity to control surface runoff from completed areas. • Avoidance of tracking on areas of permeable paving once installed and otherwise maintaining paving areas. **Monitoring Procedures and Records** • Inspection of all silt fencing, silt traps and manholes to monitor the discharge entering the drainage system and the sensitive receptors around all site boundaries. • Maintenance, cleaning and replacement of silt fences, silt traps, silt matting, and Terram as required. • The completion of the Environment Checklist (Site Audit form) on a weekly basis which will assist in documenting any changes on site and identify any changes needed to the protection systems as the development progresses. • The Site Specific Environmental Action Plan (SSEAP) will be reviewed by use of the Environmental Checklist and updated when required to reflect changes to site conditions and operations. • All records will be reviewed on a monthly basis. Bellway Homes Environmental Department must be contacted apart from the Health and Safety Department of Houlihan & Co. in the event of heavy rainfall breaching protective measures. **Dewatering** • When dewatering of excavations will be required, pumping from a sump pit will be prioritised prior to over-pumping to a vegetated area away from sensitive receptors to allow infiltration to ground. • All pumping operations will be agreed upon with local site management, who will gain approval from the Contracts Manager, and the SHE Advisor will be notified of pumping intentions. • All dewatering should utilise a 2" pump and be through a Dirtbag onto an area of gravel or straw bales at an approved designated vegetated sacrificial area located away from sensitive receptors. Silt fencing will be placed down a topographic gradient if pumping near any drainage ditch or surface water receptor. • If over-pumping into the surface water system (including use of a completed attenuation basin as collection areas) is proposed, ensure any necessary permits and adequate protection measures (potentially comprising, but not limited to, use of filter bags or a settlement tank) are in place to prevent discharge of silt into the surface water drainage system. The implemented measures should be frequently monitored and maintained to prevent the discharge of silt into the drainage system. The placement of silt matting at the discharge point within the attenuation basin may limit erosion of the banks.

21.0	COSHH	COSHH Register: refer to the OHSEQ notice board in the site office: • AdBlue • Asphalt Materials • Bituthene Primer • Bituthene Adhesive Primer • Butane - Calor • Cement – packaged • Cement colouring – Sealotone • Diesel • JCB Grease • JCB Hydraulic Fluid • Engine Oil • Marking Paint – Powerline • Mortar Plasticiser – Sealocrete • Petrol • Pipe Joint Lubricant – Hepworth/ Osma • Sika block paving seal • Silica • Weedkiller Doff

		• Wet Concrete • White spirit

22.0	Immediate Emergency Procedures	1. In case of an accident, Phone 999 and ask for the Emergency Services. 2. Shut Down all Plant and Cordon off the Area. 3. Inform the Main Contractor Site Manager. 4. Contact Alban Shehu at 07584 809221 5. In case of Fire, follow Signage and meet at the Assembly point near the front gate:
Author:		Alban Shehu

23-Contract: Bellway Homes, Trumps Green Rd, Virginia Water.	**OPERATION: (Site Specific) Groundworks**		
ORIGINATED BY: A. Shehu	**DATE: 31/10/2025**	**APPROVED BY:** Tom Keyes	**RE-ASSESS:** At least every 3mths or following an incident or change in working equipment or processes

Risk Rating: Severity (S) & Likelihood (L) as 1 (low) 2 or 3 (high) , multiply to give Overall Rating (R) 1 (low) to 9 (high) for priority actions

A=Operative: B=Others on Site including clients staff: C=Public

Hazard	People at Risk			Risk Rating			Control Measures STANDARD PPE TO BE WORN ON SITE (HI-VIZ, SAFETY FOOTWEAR, HEAD PROTECTION). ADDITIONAL/ALTERNATIVE PPE TO BE WORN WHEN REQUIRED BY RISK ASSESSMENT	Residual Risk Rating		
	A	B	C	S 1,2,3	L 1,2,3	R 1 - 9		S 1,2,3	L 1,2,3	R 1 - 9
Oil, fuel spills.	Y	Y	Y	3	2	6	**Spillage of oil, fuels**. • Steel double-skinned bunded (110% of tank's capacity) tank set up in the refuelling area. The refuelling area will be Heras fenced, and the fuel tank will be positioned upon 150mm/ Type 1 sitting on a sheet of Tarpaulin. The refuelling area will be allocated to a secure location on site away from the Network Rail zone of influence. • Environmental procedure for spills and hydraulic hose bursts. • Preventive maintenance of machines. • Daily pre-operation inspection checks are carried out & recorded weekly as a minimum. • Check lifting eye prior to lifting. • Lifting eye to have compatible shackles. • Plant "nappy" under compressor. • Newest compressors are internally bunded.	3	1	3
All works Leptospirosis	Y	Y	N	2	3	6	• The likelihood of rats and, hence, leptospirosis has been made clear to all operatives at their company induction. • The main defence against the disease is personal hygiene, including not smoking on site. • The HSE information leaflet has been used in toolbox talks and is issued to operatives • Prevent/discourage rats from coming onto the site. • Ensure adequate pest control provisions are in place around the site and welfare facilities. • Do not leave scraps of food lying around to attract them. • Ensure cuts, grazes and open wounds are covered with a waterproof plaster. • Wear waterproof gloves and clothing when working in wet conditions. • Wash your hands and arms thoroughly before eating, drinking and smoking. • Report any ill health to your Supervisor or Manager. • If you start to suffer from what seems like flu but have reason to believe that it may be leptospirosis, see your doctor as a matter of urgency. Inform your GP of your occupation. • The internal/external refuse storage area is regularly cleaned and monitored. • All waste bins were kept in a clean condition and emptied on a frequent basis. • Non-toxic monitoring bait devices are used for pest control within the food preparation and food storage areas. • Visual checks are carried out by employees, and detailed records are maintained when evidence of pest activity has been found, initiating any follow-up action.	2	1	2

Delivering, unloading, and reloading vehicles on-site Mechanical failure; road traffic incident; contact with pedestrians and others.	Y	Y	N	3	3	6	• Only trained and competent site staff to complete tasks. • **Staff will follow prescribed safe systems of work detailed under the sub-heading "Plant and vehicle preparation and delivery" of this document.** • If at any point, the safe systems of work detailed in this document are deemed insufficient, work is to stop, a risk assessment shall be completed, and new safe systems of work will be developed and implemented. • All deliveries are to be undertaken on-site within a controlled offloading pre-planned area, not in the public domain.	3	1	3
Vehicle movements Vehicles, including mobile plant, come into contact with workers and other plants/vehicles or property, resulting in potentially serious injury to persons and/or damage to plants/property.	Y	Y	N	3	3	9	• All site personnel will be made aware of the requirements of the Principal Contractor's traffic management arrangements at the site induction and updated whenever necessary. • Vehicle banksman are to be suitably trained. • Suitable safety signs will be displayed on site instructing drivers not to use mobile phones, not to reverse without a banksman and to stop if they cannot see the banksman. • The use of mobile phones is not permitted within the processing area. • All persons on site, including lorry drivers outside of their cabs, are to wear the PPE required by site rules, including a high visibility vest/coat. • All vehicles must travel at a safe speed for the conditions below the site speed limit, which is displayed on site – within the processing area, the speed limit is 5mph. • Access routes on site will be formed with a safe incline, and bunds or barriers will be provided to prevent vehicles from falling into excavations or off-ramps.	3	1	3
Operating Plant and Equipment Contact between plant and operatives resulting in possible serious injury. Plant overturning resulting in injury to the operator or other persons Failure of lifting equipment resulting in persons being struck by falling loads/equipment	Y	Y	N	3	3	9	• Establish a clear work area and cordon off if necessary to prevent pedestrian / unauthorised access. Site management to determine the need for fencing/barriers to ensure operatives not involved in the task do not enter the works area. • Operatives must never stand under an excavator bucket or a suspended load. • Only authorised competent people to operate the plant. • All plant operators to hold valid qualifications for the category of plant they operate. • All machinery to be inspected before use and, where required, to have valid thorough examination certificates. • Operators are required to complete and record daily pre-use inspections. The operator must ensure that any defects/damage are reported to H&Co's Site Manager before operating the plant. • All mobile plant to have flashing beacons and 360-degree vision ability. Loading shoves to have a reversing audible warning system. • Plant to travel at a safe speed for the conditions and always within the site speed limit. • Keys are to be removed from plant not in use and safely secured at the end of the shift. • Plant is only to be used for the purpose that it is intended and in conditions it is intended for. • Plant must be banked in areas where pedestrians are present. • Access routes on site will be formed with a safe incline, and bunds or barriers will be provided to prevent mobile plant from falling into excavations or off ramps.	3	1	3
Lifting with site excavators Failing Loads, Trapping fingers, Load swing causing injury, Falls from height, Crushing.	Y	Y	N	3	3	9	• **Staff will follow prescribed safe systems of work detailed under the sub-heading "Lifting with excavators" of this document.** • Loads to be slung by competent operatives. • Banksman to ensure that no lifts are taken over the adjacent work area and that all loads are correctly slung. • Basic task lifts only to be undertaken without the approval of the company's appointed person. • Intermediate & complex tasks require a specific lift plan. • No lifting over populated areas. • No lifting with a bucket attached. • Prior to the instruction to lift the slinger signaller to stand clear of the load • Keep the load as low as possible and use guide ropes on 2 corners where necessary	3	1	3

							• All delivery vehicles to have edge protection fitted. If delivery vehicles have no edge protection - TURN THE LORRY AWAY. • All excavator drivers are to hold current CPCS cards. being operated • Excavators to be thoroughly examined at 12 monthly intervals. • All excavators are to have a daily inspection (F91) to be carried out and recorded by the machine operator • All accessories are to be checked prior to use by the slinger signaller. All accessories are to have 6 monthly thorough inspections. Slinger signaller to ensure lifting accessories have sufficient SWL • IF IN DOUBT CONSULT H&Co's APPOINTED PERSON – Alban Shehu: 07584 809 221			
Quick Hitch devices on excavators Operatives being crushed by falling buckets, possibly fatal or very serious injury.	Y	Y	N	3	2	6	• Identify the type of quick hitch on each excavator and ensure you know if it requires pins to be fitted. Test that the bucket is correctly attached. (IE Shake, rattle and roll) • Regular checks to be made on the machine. Faults are to be reported to the site manager immediately, and machines are to be stood down until repaired. • Where required, pins must be fitted after changing the buckets; this is the driver's responsibility, not the nearest operative. Operatives are <u>not</u> to stand underneath buckets at any time.	3	1	3
Work potentially generating dust-vehicle movements on site Inhalation of silica, asbestos, and other respirable airborne contaminants, environmental nuisance	Y	Y	Y	3	2	6	• Speed restricted to 5mph. • Lorries to be specified on hire as having upward-directed exhausts. • PC to control forklift movements. • Hard top to roads, haul roads where practicable. • Road cleaning. • Drop distances from bucket into lorry or dumper skip to be minimised. • Traffic marshal to explain routes on site. • Any concrete and tarmac cutting will be carried out using a water-suppression pressurised bottle. • Water bowser will be used when it is required (especially in the summertime)	3	1	3
Work potentially generating dust-bulk movement of materials Inhalation of silica, environmental nuisance	Y	Y	Y	3	2	6	• Scrape by a blade instead of digging and dumper transfer. • Avoid double handling whenever possible. • Cover loads in motion & static spoils on site. • Limit drop distances to a minimum. • Continuous micro spray as new surfaces are exposed to spoil heaps in dry weather. • Use larger plant to minimise the number of movements. • Retain vegetation until removed just in time. • Road cleaning on and off-site.	3	1	3
Machine operations Maintenance work on plant- greasing, hydraulic oil leaks, pressurising tracks Oil, and fuel spills.	Y	Y	N	3	2	6	• Re-fuelling area. • Environmental procedure for spills and hydraulic hose bursts. • Fluids under pressure, whether toxic or not, carry the risk of serious harm if injected. • Minor entry wound belies harm caused as fluid blocks veins or arteries. • No fault should be traced without Kevlar gloves; only Houlihan issue grease guns should be used. • Fitters to adjust excavator tracks unless the driver has had training. • Preventive maintenance of machines. • Daily pre-operation inspection checks are carried out & recorded weekly as a minimum.	3	1	3
Compressor operations Oil, fuel spills.	Y	Y	N	2	2	4	• Re-fuelling area. • Environmental procedure for spills and hydraulic hose bursts.	2	1	2

							• Preventive maintenance of machines. • Daily pre-operation inspection checks are carried out & recorded weekly as a minimum. • Check lifting eye prior to lifting. • Whip check fitting attached at hose inlet. • Lifting eye to have compatible shackles. • Plant "nappy" under compressor. • Newest compressors are internally bunded.			
Use of vibrating plant **H**and **A**rm **V**ibration	Y	N	N	3	2	6	• Plant is selected for low vibration characteristics and a full assessment has been carried out for tasks where vibration exposure is expected. • The intention is not to expose any operative to even the lower action value. • Drilling and vibrating concrete works for a short duration. • Tools should be used for their designated purpose. • All operations have been timed for trigger times, and manufacturers' information re-vibration was checked for OPERC emission test results. • As the trigger time is critical, this will be periodically checked by timing actual operations- monitoring sheets for the site supervisor in the vibration pack. • HSE nomogram for each item of plant. • Equipment will, in addition, be tested by an accelerometer monitoring vibration levels and trigger time (exposure) by process: results will inform purchasing policy and decision re continuous safe use. • The plant department will maintain contact with suppliers to ensure that they're aware of any engineering control measures that can be installed to minimise vibration levels. • Any damaged equipment must be taken out of use and reported. • All work equipment must have appropriate guards in place. If guards are missing, the item may not be used. • Our vibration assessments will be on site. We do not keep registers because it involves recording trigger time, which is usually not done properly. Our assessments are based on operations which have been timed- as trigger times- by observing operations and collecting the seconds of use as against the ancillary work where there is no vibration. We do not accept it is a good idea to record harm rather than avoiding it,	3	1	3
Use of plant emitting noise **N**oise **I**nduced **H**earing **L**oss	Y	Y	N	3	2	6	• Plant has been selected for low noise rating. Ear defenders and ear plugs are available to the workforce. Where the noise at the workforce reaches 80dB, ear protection will be worn as per company policy. • It is not expected that anyone will be exposed to noise of 90dBA or over, but where the level exceeds 85dBA, ear protection must be worn, and we will try to reduce the noise dose by reduction at source. • All noisy areas display mandatory 'Ear Protection' signs. • Site monitoring by process and site-specific operations if necessary. • Acoustic blankets deployed at the site boundary and/ or locally to the source, depending on ongoing monitoring and site-specific requirements. • The plant department will maintain contact with suppliers to ensure that they're aware of any engineering control measures that can be installed to minimise noise levels. • Any damaged equipment must be taken out of use and reported. • All work equipment must have appropriate guards in place. If guards are missing, the item may not be used. • Wherever possible, noise is combated at the source by enclosures and engineering controls. Acoustic enclosures and engineering controls are regularly inspected to ensure they achieve the designed noise reduction. • Access to noisy areas is restricted to only those persons having to enter the zone, thereby reducing the number of persons exposed by distance.	3	1	3

Cutting concrete – Kerbs, slabs and other PCC items. Inhalation of respirable silica, strike by flying fragments. Vibration.	Y	Y	N	3	3	9	• Kerbs cut in an area excluding public and other operatives. Physical screening is positioned to protect other workers and passers-by. • Battery-operated water dust suppression or pressurised bottle unit on disc cutters must be used (on diamond-tipped blades only). • Correct blade used on disc cutters. • Filter masks to P3 standard worn (personal issue, disposable, fit-tested). • Stihl disc cutters selected for low vibration. • Tasks will not require trigger time over lower action levels. Nomogram for specific work equipment on site. • COSHH assessment in place. • Abrasive wheel training **must** be provided to all abrasive wheel users. • Eye protection to BS EN166:1995 1. B will be worn	3	1	3
Cutting Steel Strike by flying fragments, Vibration	Y	Y	N	3	2	6	• Steel will be cut on-site in a cordoned-off section, which will be on site clear of any fire hazards, with the correct PPE being worn. • Ensure refuelling areas containing flammable substances are at least 20.0m away. • Task will not require trigger time over lower action levels. • Nomogram for specific work equipment on site. • Hot works permit to be in place • Fire extinguishers to be at the work face • Operatives to wear safety goggles • Operatives to wear ear defenders • Fire watchman to be present at all times when cutting	3	1	3
Placing concrete -backing kerbs, slabs, strip footings Contact with wet concrete causing chemical burns, irritant or contact dermatitis	Y	N	N	2	2	4	• Concrete delivered ready mixed to avoid site mixing where practicable. • The chutes from RM lorries will be opened out and directed by the driver ONLY. • Mix for backing kerbs will be dry to prevent slump, and this will minimise the possibility of splash. • Placing by hand from dumper skip. PPE will include nitrile gloves and clothing to cover up arms and legs. • Standing in concrete to be avoided if possible. • Use of vibrating poker limited where possible and selected for low vibration. • COSHH assessment in place	2	1	2
Lifting and placing kerbs/slabs Injury to back from manual handling of standard HB2 pre-cast concrete kerbs	Y	N	N	3	3	9	• HB2 kerbs weigh 67kg: substitution of lighter kerbs is only possible if permitted in the specification. • Kerb lifting wheelbarrow will be used: push force only 5kg after the kerb is levered off the ground by pressing down on the handle. • Easylifter replaces the need to use the machines in constricted space and with passing traffic. • Transit was carried out safely by Probst Kerb Caddy. • **Refer to the full Houlihan & Co slab/kerb laying manual handling assessment**	3	1	3

Confined spaces in manholes
Asphyxiation, Poisoning from toxic gases, Injuries from exploding or igniting gases, Infection from contaminated water, e.g. Weils disease, Drowning, Back injuries from falls or collisions with structures/ fittings in the working area.
	Y	N	N	3	3	9	• Wherever possible, consider doing the work from outside the space
							• A Permit to Work system should be in operation.
							• A detailed assessment of the task has been carried out:
							  • Available ventilation
							  • The potential for hazardous gases/atmosphere to be present
							  • Hygiene/welfare requirements.
							• The local rescue services have been informed of the work, and advice or inspection has been sought where necessary. (High-risk operations).
							• Suitable detection equipment is on-site and used prior to each entry and continually during the presence of people in confined spaces.
							• Emergency breathing apparatus and harnesses are readily available on site.
							• Precautions for the use of plant and equipment or heavier-than-air gases are established.
								3	1	3

							• Flood potential and isolation have been checked. • Emergency procedures are fully developed and have been adequately rehearsed. • Workers must be physically fit and competent to enter and undertake work in confined spaces • Effective communication should be established between workers in the confined space and those outside the area • The atmosphere of the confined space should be monitored for the presence of and levels of gases and must always be tested before entry. • If dangerous fumes are present, suitable breathing apparatus should be worn, and the person entering the confined space should wear a safety rope, one of each end is held by the person keeping watch outside • Equipment which may release excess oxygen or engines which omit carbon monoxide gas should not be used in confined spaces • Smoking, naked lights, sparking tools and ant nylon material should be prohibited • If working in contact with contaminated water, e.g. in sewers, workers must be inoculated against serious disease. Any skin cuts should be covered • Washing facilities should be available to encourage good hygiene • Trenches deeper than 4.5m should be treated as confined spaces. • Manholes to be vented for 30 minutes before entering. • Gas monitor to be placed in manhole 30 minutes before entering. • A confined space work permit is to be obtained before entering. • Operatives to be briefed on an escape plan. • Operatives are to be trained to work in confined spaces. • Topman to be present at all times. • Rescue harness and tripod to be used. • Escape kit to be used where necessary. • Benching should be carried out with the cover slab removed to allow air entry.			
Working with live sewers/Sewer diversions Gastroenteritis, Wiels disease, Infection of the skin or eyes; and/or occupational asthma, resulting in attacks of breathlessness, chest tightness and wheezing produced by the inhalation of living or dead organisms	Y	N	N	3	3	9	All the above items are covered in **Confined spaces in manholes** • Overpumping to be carried out where operatives need to enter a live sewer. • Ensure that employees and line management understand the risks through proper instruction, training and supervision • Waterproof gloves and overalls to be worn at all times • Gas monitors to be in place • Good personal hygiene • Flow to be diverted where possible. • Management to ensure a good standard of welfare is kept on site prior to any live sewerage works taking place.	3	1	3
All work in the area- live services Contact with live service resulting in burns from flashover or electric shock. Toxic or flammable gases from damaged sewer pipes. Damaged or severed pipes leading to leakage of substances, resulting in potential flood, gas leak, explosion or fire Contact with severed fibre optic cables	Y	Y	N	3	3	9	• A Permit to dig will be completed and authorised by the client site team. • **Works must be undertaken as per H&Co's safe digging procedure "works on/near underground services".** • Operatives are to receive full TBT relating to site services provided by the services coordinator prior to starting work. • Cable and metal location equipment must be duly calibrated and in good working order. Operatives appointed will be trained on how to locate services using the EziSystem & safe digging techniques as set out in the H&Co's works/on near underground services procedure. (Note: Lighting columns may be dormant during the day so the generator should be used to trace cables). • Utility plans from network operators must be reviewed in conjunction with a visual survey to be carried out for any service covers nearby that may indicate buried services in the trench line. • Located services will be identified, i.e. gas, electricity, etc., and indicated clearly by the survey operative using marker paint on the ground, with depth estimations if possible.	3	1	3

Work near overhead lines Contact with live conductor, arcing	Y	Y	N	3	3	9	• Operatives **will** now wear flame-resistant clothing (a Nomex material by J. Ross) for all close proximity work to any exposed cable. (Note: The clothing can be used in layers to reduce the heat burden of wearing it, but as UKPN have not provided an arc flash risk assessment giving us a calorific value to inform clothing selection, we will assume the worst-case scenario and wear the highest level of protection). • An air-pick **must** accompany every excavation on/near underground services to loosen up fill material & insulated tools to remove loose material only – forced digging must be avoided if ground conditions permit. • No mechanical digging within 1m of a known service. • Safe digging practice will be practised by all workers when hand digging in the proximity of an underground service, i.e. air-pick **must always be the first tool of choice** used to lose up backfill material. Spades/shovels should be used, not picks or power tools, and horizontal digging should be used to locate the exact position of a cable to avoid fracturing it. • All exposed services must be supported. • It should be assumed that all services are "Live" until proven otherwise. • If a service is struck, cease work immediately and report it to site management. • The quality of backfill is important for future site users, and if a man has to be exposed to service connections, only granular material should be used. No cohesive soil and marker tape are essential. Engineers should record sufficient data before backfilling for the PAS256 recording. • Control measures set out in GS6. • A site visit from the DNO required establishing sag and swing and advice on safety clearance- (GS6 survey). • Routes to transit are set out with goalposts at entry and exit and sideways barriers to delineate the width of access. • Working underneath will require notification to DNO, grant of permission, probably with conditions, and limiters/ chaining back of booms etc. or use of a small plant, in either case, to prevent absolute reach of the plant into space above clearance limit.	3	1	3
Presence of contaminated ground Chemical injury, skin irritants, burns, blindness, death	Y	N	N	2	2	4	• Ground conditions must be established by a survey to identify the type of ground in which the excavation is to be carried out • Contaminants will be removed by a remediation contractor, and a validation/clearance report must be issued to us from the client. • Discovery procedure in place for reporting unusual conditions not previously discovered in surveys, e.g. unusual smells, bright coloured layers in the ground	2	1	2
Constructing walls from the foundation level using bricks or blocks & raising brickwork on manholes leads to Manual handling issues, Slip and trip hazards from an untidy working area Repeated contact with mortar, Collapse of brickwork/blockwork Contact with sharp edges Concrete mixers with faulty or missing guards, Silicosis.	Y	N	N	2	2	4	• Small bags of cement (25kg) should be used to minimise the risk of back injuries, etc • Management should arrange for the safe delivery of materials to the work area • As a result of the COSSH assessment, all operatives should be informed of the hazards of dermatitis and the control measures required to avoid contact with mortar and good personal hygiene • The operative knocking-up mortar MUST wear a P3 mask and eye protection when using the mixer • Washing facilities should be available on-site to ensure good personal hygiene • Mechanical or electric cement mixers should be inspected for faults before use • Safe working platforms should not be required for substructure blockwork; if required, consult with the H&S department. • Foundations must always be stripped to TOC level prior to the bricklayer's arrival • Where practicable, lifting aids are provided to reduce/remove the need for manual handling. • Lightweight blocks are specified where possible. • COSHH data sheets are readily available on-site and displayed on the OHSEQ site noticeboard • Manual handling assessments are readily available on-site. • Work is halted/curtailed in inclement weather. • Suitable and sufficient dust control measures are provided and used. • Bricklayers' foreman should ensure bricks/blocks stacked close to the working area are on a level base and stacked to a safe working height	2	1	2

							where they cannot topple over – this should minimise bending, carrying, stretching and twisting activities, all of which can generate back injuries. • Concrete blocks to be cut with a block splitter or hammer and bolster to minimise the use of airborne dust. Eye protection must be worn manually when cutting/breaking bocks.			
Excavations Noise / Vibration Weakening of adjacent structures Ingress of water Falls of persons Falling materials or plant Underground services – gas, electricity or water Toxic or flammable gas Oxygen deficiency "Boiling" Collapse of excavation Presence of contaminated ground	Y	Y	N	3	3	9	• Permit to Excavate will be completed and authorised by the Contractors Management. • Ground conditions must be established by a survey to identify the type of ground in which the excavation is to be carried out • Prior to the commencement of excavation, the need for and method of support should be determined • Support materials will be on site before excavation starts • If there is a possibility of underground services being present, the area will be surveyed using a suitable detection instrument • Inspections of excavations will be carried out prior to each shift, after any event likely to affect strength or stability, and after any accidental fall of material. A logged report **must** be carried out every 7 days. • No heavy plant within 2m of an unsupported excavation. • Excavations should be assessed by a competent individual, nominally the site supervisor. Where necessary, the sides of the excavation will be battered to the angle of repose or stepped, making sure the step is equal to the depth of the excavation. • Where an assessment establishes possible ventilation problems, a gas monitor will be utilised to monitor the atmosphere before entry • Plant and materials will be kept away from the side of excavations to prevent undue pressure or ingress of exhaust fumes • Excavations must be suitably illuminated • To keep the atmosphere healthy, ventilating equipment should be used in confined areas • If the depth of the excavation is two metres or more, or if the depth is less but there is a particular risk of anybody falling, suitable guard-rails will be placed, and suitable access arrangements, such as ladders or ramps, should be provided • If there is a risk of water ingress, suitable methods and/or equipment should be provided to either prevent the entry of water or to remove water, e.g. water pumps • If a plant could fall into the excavation, timber baulks should be provided • Inspections of excavations will be carried out prior to each shift, after any event likely to affect strength or stability, and after any accidental fall of material • Suitable gloves must be worn at all times when working in/around excavations. • All excavations **must** be fenced off with suitable fencing and signage. Pins and bunting/barriers may be suitable for shallow trenches. Heras Fencing should be used for deep trenches.	3	1	3
Working from height with loose materials/plant Falling material, debris striking operatives/visitors	Y	Y	N	2	2	4	• Plant and materials will be kept away from the side of excavations to prevent undue pressure or ingress of exhaust fumes. • If a plant could fall into the excavation, timber baulks should be provided • All loose material is to be cleared at the end of every shift. • No loose material to be left in close proximity to excavation where there could be a risk of material falling. • All excavations **must** be fenced off with suitable fencing and signage.	2	1	2
General - Manual Handling Strained/pulled muscles, abrasions, cuts, foot injuries, back strain, Slip/trips/falls	Y	Y	N	3	2	6	• Assess the task; use appropriate lifting equipment / lifting accessories for the activity. Always use mechanical lifting aids where necessary. • Assess the weight of the load; avoid lifting heavy loads of more than 20kg. • Break the load down into smaller, lighter parts. • Plan the work to avoid excessive carrying. • Change the layout of the work if possible. • Ensure work areas are clean and tidy, free from tripping and slipping hazards. • Check individual capabilities of those carrying out manual handling operations. • The weight of the load is checked before any lifting commences.	3	1	3

							• Mechanical equipment such as forklift trucks, pallet trucks, trolleys, and sack barrows are used to reduce employee injuries. • Ensure a clear working area for general distribution and installation. • Environmental conditions, including unobstructed walkways, no tripping hazards, adequate lighting etc.			
Concrete operations. Vibration, Concrete penetration of eyes, nose or ears due to an uncontrolled surge during cleaning operations or clearing of blockages, Exposure burns to skin.	Y	N	N	2	2	4	• PPE & washing facilities should be provided. • Regular toolbox talk training must be provided regarding PPE, burn injuries, dermatitis, etc. • Appropriate personal protective equipment (PPE) should be worn • Coveralls to be worn whilst concreting – there should be no exposed skin. • The accumulation of concrete spillage should be prevented. • Glasses to be worn whilst concreting. • Walking boards' are to be in place prior to the slab/beams/ crane base pour commencing for the safe passage of concrete workers. • Concrete Poker can be used for no more than 3 hours, which is the Daily Exposure Action Value (EAV). (Dally Exposure Limit Value ELV is reached over 12 hours)	2	1	2
Steel fixing, shuttering & general site duties Stepping on tied-steel wire, Cuts to hands from Stanley knife & various site materials, Trapping fingers, Sprained ankles,	Y	N	N	2	2	4	• Exclusion zones are to be erected by physical barriers before commencing work. Banksman to enforce exclusion zones. • Steel toe cap boots are to have midsole protection. • NO loose correx to be left 'laying' and especially unweighted. • All loose tie wires are to be cleaned & collected by the site fixers as they progress to new work fronts. • Automatic retractable blades only to be used for cutting materials IE correx for shuttering. • Suitable gloves MUST be worn; however - Gloves will not completely protect your hands, but if you do receive a cut, it may not be quite so bad. • NO walking on ground beams or any other RC cages without walking boards. • Glasses high-impact goggles to be worn at all times whilst cutting site materials. Task specific. • Minimum FFP3 dust masks to be worn whilst cutting site timber/ply. • Minimum FFP3 dust masks to be worn whilst cutting any concrete objects, including kerbs & slabs. • Electronic water attachment to be in place on the cut of saws whilst cutting concrete surfaces, including kerbs & slabs. • Cutting station to be fenced off and ear protection to be worn at all times. • A Hot Permit must be obtained prior to any cutting taking place.	2	1	2
Setting out with instruments/surveying with cobras/rods Slips/trips/falls, Service strikes, cobra/rod striking operative.	Y	Y	N	2	2	4	• Read and understand setting out and service drawings prior to setting out. • Pins and stakes are only to be installed when no services are present; the site engineer must review stat plans & CAT survey the area; if services are remotely likely, PinSafe setting out instruments **MUST** be used. • Cat scanning of the area to take place prior to excavation. • Line marker paint to be stored in the COSHH storage area. • Empty line marker paint to be disposed of in the empty line marker paint can in a general waste bin – ONLY IF EMPTY. • Do not enter the swing radius of an excavator. Adhere to exclusion zones. • Operatives using the cobra reel/rods must wear eye protection & gloves at all times whilst undertaking the operation. • Flashing safety lights on site can interfere with levels, necessitating the removal of machinery or turning off rotating orange lights while the plant is in the vicinity. Risk migrates to plant/ pedestrian interface: The engineer/ site foreman must authorise the lights off, arrange work to minimise the time necessary and arrange banking vehicles if required.	2	1	2
COSHH Chemical injury, skin irritants, burns, blindness, death	Y	Y	N	3	2	6	• Refer to COSHH Assessment for all hazardous substances to be used and briefed to all operatives prior to commencing work. • COSHH data sheets provided when COSHH products are issued from stores • Full PPE to be worn in conjunction with COSHH assessments • All hazardous substances must be stored in the provided COSHH storage cage.	3	1	3

Work near asbestos inhalation of respirable fibres leading to mesothelioma, lung cancer	Y	Y	N	3	3	9	**NOTE: there is no known safe level of exposure to asbestos.** • Additional MS from a specialist licensed contractor who will be in attendance for monitoring and for emergencies if bulk asbestos is uncovered. • Background air monitoring must have taken place to give a baseline, which must be a measured figure below clearance level or undetectable. • Continuous monitoring during operations with analysis continuous from the on-site facility. Personal dosimeters for all personnel involved. Again with analysis in real time. • Prevention of dust raised by damping down, minimising drop distances, avoiding double handling, prompt removal from site, stockpiles only if absolutely necessary and covering on the impervious membrane. • As a licensed contractor operative, I place in case bulk asbestos is found, then stop work, re-assess, and treat it as licensed work, with the full facility for this already on site.	3	1	3
Hand laying tarmac Burns from contact with hot tarmac-delivered at 170°. Irritant or contact dermatitis	Y	N	N	3	2	6	• Heat-resistant gauntlets to be worn. • Body covered up against splash. • Placing at a minimal drop distance from the dumper skip. • Tools kept clean- Farvis tool heater used- no open fire or use of diesel. • COSHH assessment in place	3	1	3
Fire	Y	Y	Y	3	3	9	• All fuels must be kept in the correct type of container that is clearly identified and labelled. • No refuelling to take place in the vicinity of forms of ignition. • Engines must be switched off. • Do not improvise for containers or funnels. • Check that you are using the correct fuel. • . • No smoking/no naked flames. Signs to display. • All hazardous substances must be stored in the COSHH storage. • Any cutting metal or welding involving sparks or naked flame must be controlled with a Hot Work Permit	3	1	3
Silt Management. Silt gets into the water courses and contaminates the water system, damaging the environment on the waterways/ risk to aquatic life.	N	N	Y	2	3	6	• The placement of gulley protection (specially designed gulley guards, or standard protection - straw and terram) in all gullies during construction which are to be inspected and replaced/cleaned when necessary. • The placement of a terram layer within all manholes during construction and to be inspected and replaced when necessary. • Minimising the movement of plant on and off roads to prevent the tracking of excess soil onto roads and highways. • Hardstanding areas should be installed at the front of all plots to enable 'clean' forklift access. • The placement of hardstanding or topsoil at the earliest opportunity to control surface runoff from completed areas. • Avoidance tracking on areas of permeable paving once installed and otherwise maintaining paving areas. • Stripping topsoil must be done in stages to maintain as much vegetation cover across the site as possible. • Retention of vegetation as far as reasonably practicable along western and south-western boundaries to promote infiltration of any surface water and silt run-off. • Haul road preferably be topped with tarmac, which is easy to clean with a road sweeper. • Jet wash will be installed in the exit of the site to clean the wheels of any vehicle leaving the site. • The designated car park will be topped with stone and be maintained mud-free. • Silt traps and silt fencing will be strategically constructed along the sites' western and south-western boundaries to reduce runoff. These will be formed to a depth of 400mm with excavated arisings placed on the downgradient side of the slope to aid the retention of silt and	2	1	2

							excessive surface water run-off in the detention basins. • A series of Sady Matts will be placed along the watercourse to prevent any silt from going to the main water system should the silt traps placed on western and south-western boundaries alone not be sufficient to prevent run-off of surface water/silt.			
H&Co's Contracts Manager and Site Manager to ensure suitable first aid arrangements are available on site at all times & compliance with the above document.										

B 24.0	HAND ARM VIBRATION & DECIBLE LEVEL REFERENCE CHART					
	Equipment/Plant	**m/s²**	**Time to reach EAV 2.5m/s² (Daily Exposure Action Value)**	**Time to reach EVL 5m/s² (Daily Exposure Limit Value)**	**Sound levels**	**HSE Points (per 15/60 mins)**
	Hilti DD130	2.2m/s²	10hr 20mins	24hr mins	80dB(A)	2.2/10
	Hilti TE 1000	6.5m/s2	1hr 11mins	4hr 44mins	87dB(A)	21 / 85
	Hilti TE 700 AVR	6.6m/s2	1hr 09mins	4hr 35mins	86dB(A)	22 / 87
	Hilti AG230-S	8.7m/s²	3hr 08mins	12hr 34mins	89dB(A)	8 / 32
	Atlas Copco 09 PE (Ver)	3.8ms2	3hr 28mins	13hr 51mins		7 / 29
	SK12 Med Breaker	4.2m/s²	2hr 55mins	10hr mins	108dB(A)	25/100
	Atlas Copco 230 PE	4.2m/s2	2hr 50mins	11hr 20mins		9 / 35
	Tex 150PE Breaker	4.5m/s²	2hr 28mins	9hr 53mins	90dB(A)	10 / 41
	Atlas Copco LT5005	6.4m/s	1hr 13mins	4hr 53mins	106dB(A)	20 / 82
	Vibrating Poker	4m/s²	3hr 08mins	12hr 30mins	85dB(A)	8 / 32
	Wacker Plate Belle 320-574mmx320mm	2.42m/s	8hr 32 mins	>24hr	101dB(A)	3 / 12
	Wacker Plate13/40Belle 720mmx400mm	3.20m/s	4hr 53 mins	19hr 32 mins	105dB(a)	5 / 20
	Wacker Plate Belle 320-720mmx320mm	4.43m/s	2hr 33 mins	10hr 11 mins	105dB(A)	10 / 39
	MBW Plate Compactor GBX Series 3550	4.5m/s	2hr 28mins	9hr 53mins		
	Plate compactor	5.18m/s²	1hr 52mins	7hr 27mins	93dB(A)	13.4/54
	LF75 Vibration Plate	6m/s2	1hr 23mins	5hr 33mins		18/72

	Wacker Plate Bomag/1845	7.3m/s	0hr 56min	3hr 45mins	89dB(A)	27 / 107
	Skill saw 5903R	3.0m/s^2	5hr 33mins	22hr 13mins	95dB(A)	4.5/18
	Airsaw Toku 9''	3.6m/s	3hr 51min	15hr 26 min	82Db(A)	35
	Petrol Saw Stihl/TS410	3.9m/s	3hr 17 mins	13hr 9 mins	98dB(A)	8 / 30
	Petrol Saw Stihl/TS420	3.9m/s	3hr 17 mins	13hr 9mins	98Db(A)	8 / 30
	Petrol Saw Stihl/TS800	Left/6.5 Right3.9m/s			116dB(A)	
	Cut-off Saw Stihls	3.90m/s^2	3hr 17mins	13hr 09mins	98dB(A)	7.5/30
	Bosch Angle Grinder GWS 7-115	6.5m/s	1hr 11 mins	4hr 44 mins	91dB(A)	
	Hilti DD130	2.2m/s^2	10hr 20mins	24hr mins	80dB(A)	2.2/10
	Hilti TE 800 AVR	9m/s^2	3hr 0mins	12hr 0mins	87dB(A)	8/32
	Stirrer Drill / Paddle Mixer	3.5m/s2	4hr 5mins	16hr 20min	87dB(A)	6 / 25
	Ausa 3t Dumper	m/s^2	hr mins	hr mins	101dB(A)	
	Thwaites 9t FTD	m/s^2	hr mins	hr mins	103dB(A)	
	Takeuchi 1.5t	m/s^2	hr mins	hr mins	93dB(A)	
	JCB 4.5t	m/s^2	hr mins	hr mins	94dB(A)	70(dBA) cab
	JCB 13t	m/s^2	hr mins	hr mins	101dB(A)	70(dBA) cab
	Doosan 14t	m/s2	hr mins	hr mins	101dB(A)	70(dBA) cab
	Doosan 22.5t	m/s2	hr mins	hr mins	105dB(A)	70(dBA) cab
	JCB 22t	m/s^2	hr mins	hr mins	105dB(A)	70(dBA) cab

	Bomag 135 AD	2.5m/s	8hr	>24hr	106dB(A)	
	Rammax	Remote control	hr mins	hr mins	109dB(A)	
	Bosch Angle Grinder GWS 7-115	6.5m/s	1hr 11 mins	4hr 44 mins	91dB(A)	
	Pramac 10KVA	m/s^2	hr mins	hr mins	70dB(A)	@ 7 mts
	Soil-Mech 4 piling rig	m/s2	hr mins	hr mins	103dB(A)	
	SP11 screed pump	m/s2	hr mins	hr mins	79dB(A)	

25.0	COMMUNICATIONS	
25.1	TO WHOM THE INFORMATION / WILL BE COMMUNICATED AND HOW? (TO INCLUDE NON ENGLISH SPEAKING OPERATIVES):	All persons involved in the operation
25.2	CONFIRMATION OF OPERATIVES BRIEFING: M0616 – MS - 2401- 278 Works	

I have been briefed on the requirements and risks involved with the operation detailed above and fully understand the contents and implications. I was allowed to discuss any points that I did not understand or felt were important in my health, safety, or welfare.

NAME:	SIGNATURE:	DATE: