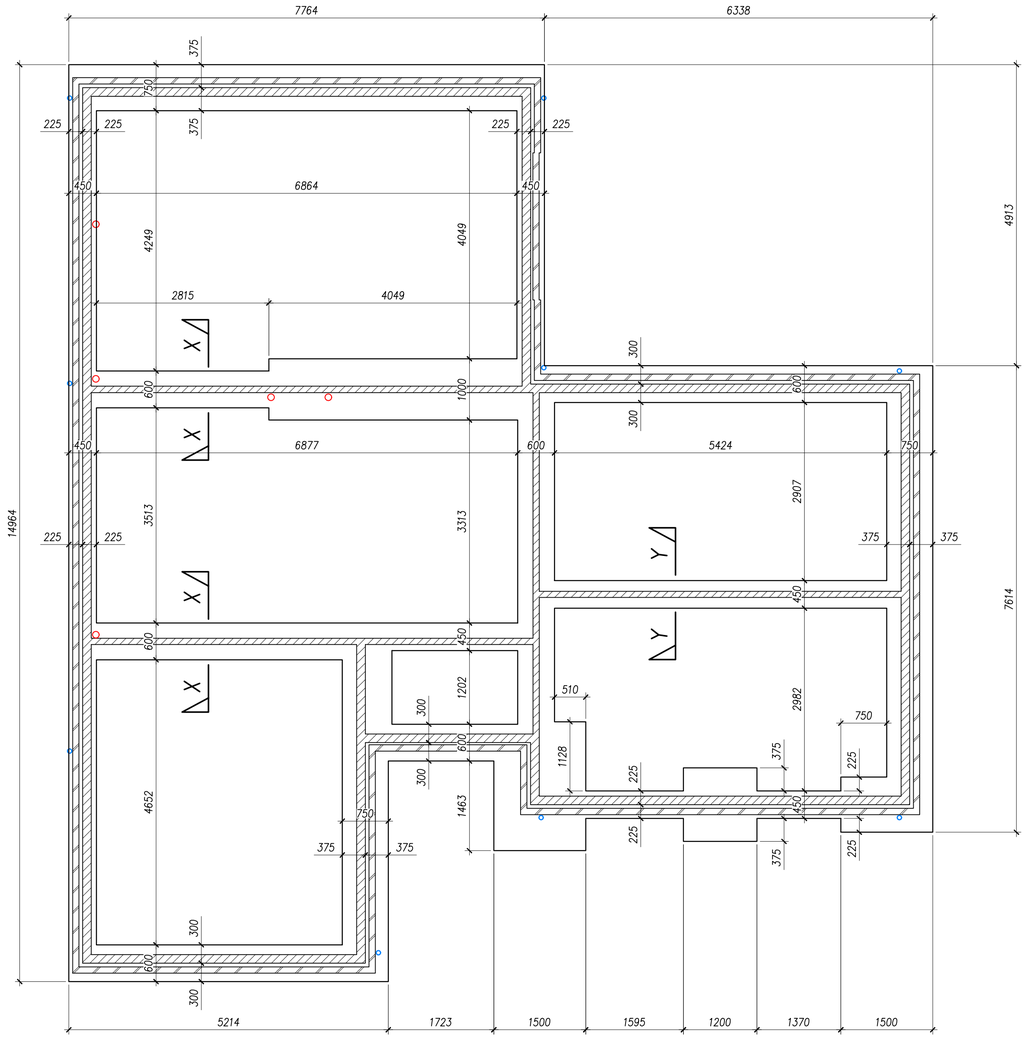

PLOT 178 (AS) PLOT 185 (OPP)

HT 5.1 FOUNDATION PLAN

SCALE 1:50

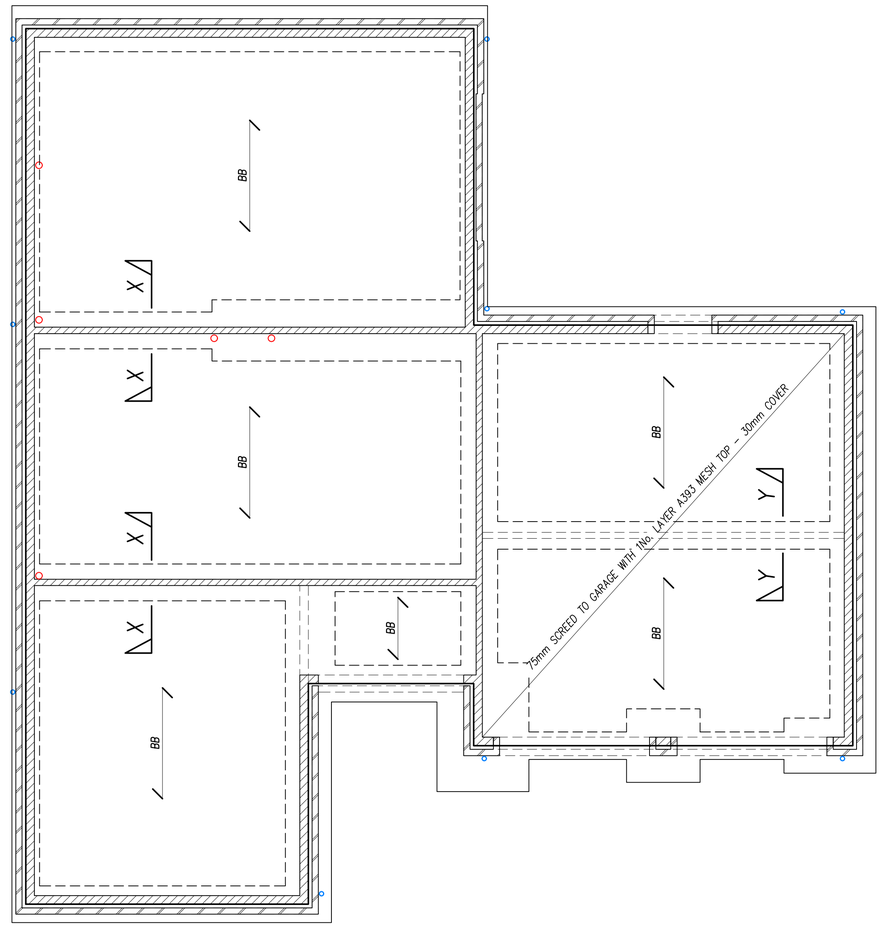

PLOT 178 (AS) PLOT 185 (OPP)

HT 5.1 GROUND FLOOR PLAN

SCALE 1:50

FOUNDATION AND SLAB LEVELS			
PLOT NUMBER	FFL	TOC	SOFFIT LEVEL
178	20.000	19.175	18.675
185	20.850	20.025	19.525

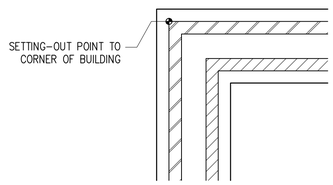

BUILDING SETTING-OUT POINT

1:25

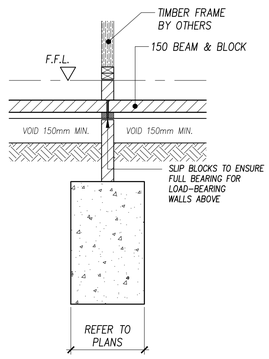

SECTION X–X

SCALE 1:25

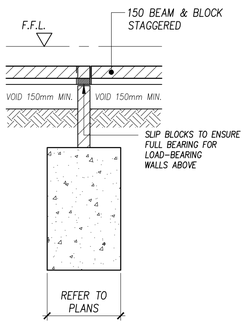

SECTION Y–Y

SCALE 1:25

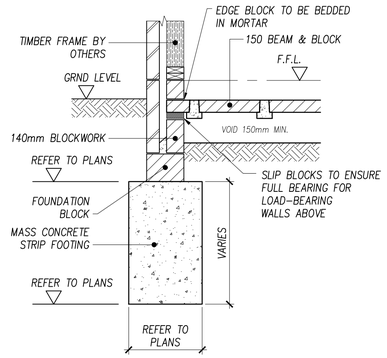

TYPICAL PERIMETER FOUNDATION SECTION

SCALE 1:25

NOTES

1. THIS DRAWING TO BE READ IN CONJUNCTION WITH ALL RELEVANT DRAWINGS AND SPECIFICATION
2. STRIP AND PAD FOUNDATIONS TO USE GEN 2 CONCRETE
3. DPC TO ARCHITECT'S DETAILS
4. INSULATION AND FINISHES TO ARCHITECT'S DETAILS

LEGEND

BLOCKWORK DENSITY 1500kg/m3 MIN.
COMPRESSIVE STRENGTH 7.3N/mm²
MORTAR GRADE M6

BRICKWORK TO ARCHITECT'S DETAILS

BB — 150mm BEAM & BLOCK FLOOR

NOTE:
WHERE A 100mm WIDE INTERNAL WALL SUPPORTS BEAM & BLOCK FLOORS ON BOTH SIDES, THE BEAM & BLOCK FLOORS ARE TO BE STAGGERED TO ENSURE THAT EACH BEAM GAINS FULL BEARING ONTO THE WALL

Rev.	Description	By	Chkd.	Date
P01	ISSUED FOR APPROVAL	ADP	JFK	10.05 2024

PRELIMINARY

G.D.C. Partnership Consulting Engineers
THIRD FLOOR
29 LONDON ROAD
BROMLEY
KENT, BR1 1DG (UK)
Tel: +44(0)20 8460 2160
Fax: +44(0)20 8313 3122
www.gdcpartnership.co.uk

Client: CALA

Project: NETHERHALL GARDENS

Title: HOUSES 5.1 DETATCHED FOUNDATIONS & GROUND FLOOR

Drawn	ADP	Chkd.	WTF	Appd.	DSM
Scale	1:50 @A1	Drg. No.			Rev.
Project No.	9013	GDC-00-00-DR-S-3025			P01

GDC ACAD FILE No. 9013-GDC-00-00-DR-S-3025